TECHNO MODULE LIGHT

# MODULAR ELSTEEL ENCLOSURES

www.elsteel.com

The best technical solution at the best possible price

This lightweight version of Techno Module covers all requirements up to 1600A 50 kA / 1 s.

With less material but maintaining the same strength and quality, the end-user gets an extremely versatile product which can be easily modified and expanded, during and after installation.

Distribution boxes can be either fully welded Box (as shown here), or a modular construction; Techno Module Light (opposite).

Either way the same inserts will fit, making it effortless to mix and match exactly according to your project.

That's the beauty of modular!

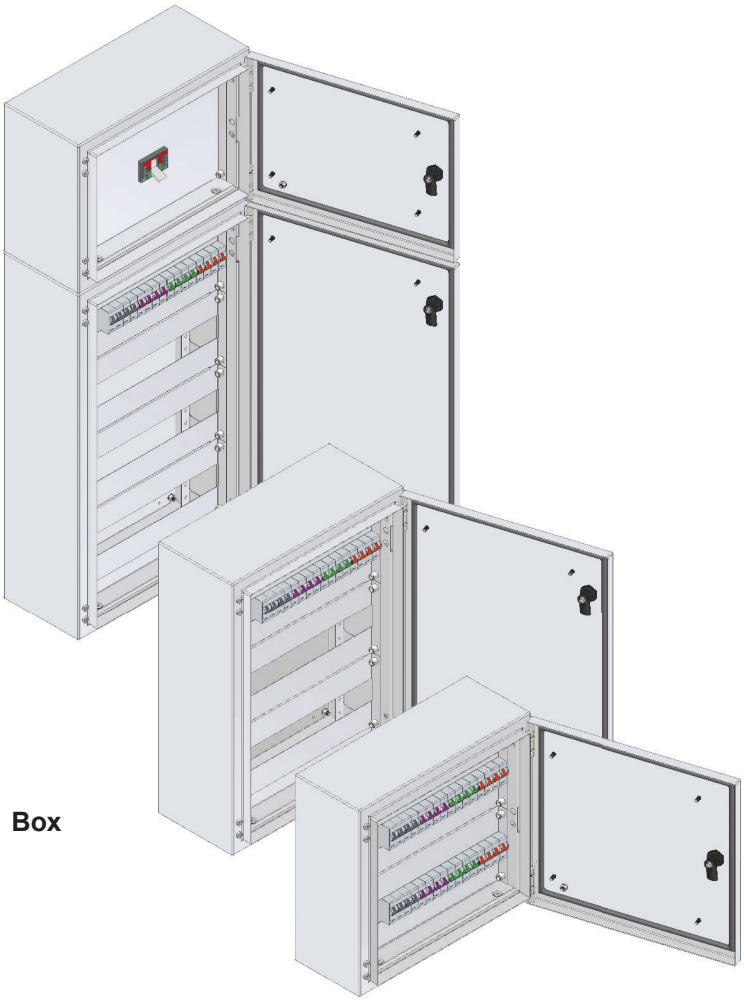

**Box**

You´re holding a top of the line quality product in your hands.
Made with love and excellence!
I hope you will enjoy assembling and using Elsteel products as much as I enjoy manufacturing it for you.

**Fang Logstrup**
Managing Director

Distribution boards are a fast product; they must be easy to assemble, fast to wire and preferably delivered yesterday!
We have designed Techno Module Light to be easy to assemble and prepared for "fast wiring"!
As much as possible is factory assembled while still allowing you the freedom to build any size panel you need.

**Wall mounted**

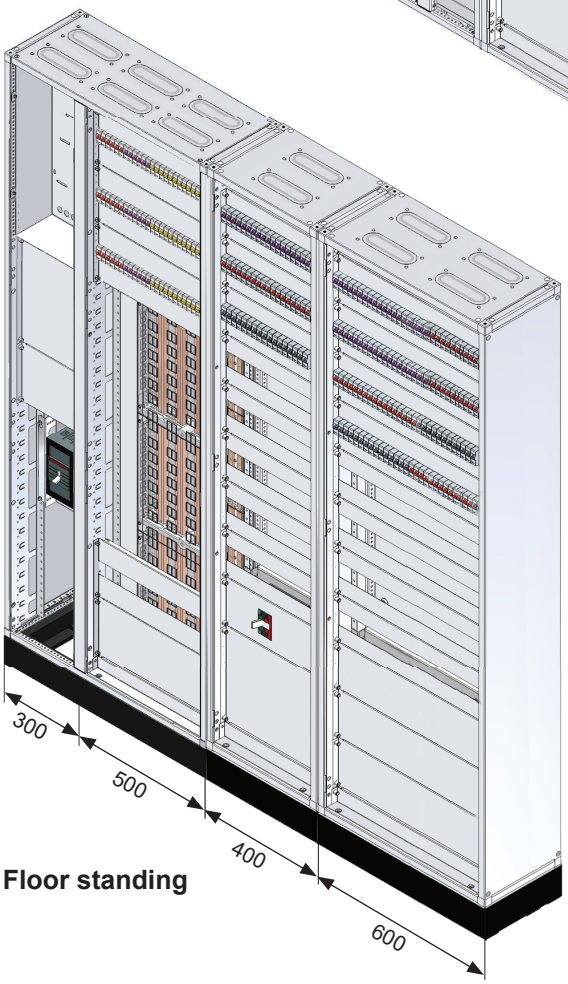


**Floor standing**

Floor standing or wall mounting is available - along with many more features, that reduce assembly time considerably.

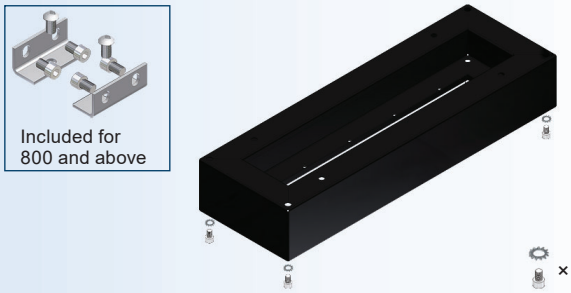


## PLINTH FRAME LIGHT

## SOKKEL LIGHT

| TYPE | DESCRIPTION | PANEL SIZE (W×D) | WEIGHT (kg) | ORDER No. RAL 9005 SMF. |
|---|---|---|---|---|
| PFL 4.2 | PLINTH FRAME LIGHT | 400 X 200 | 3.40 | 17994 |
| PFL 6.2 | PLINTH FRAME LIGHT | 600 X 200 | 6.00 | 18000 |
| PFL 8.2 | PLINTH FRAME LIGHT | 800 X 200 | 9.20 | 18002 |
| PFL 10.2 | PLINTH FRAME LIGHT | 1000 X 200 | 10.70 | 18004 |
| PFL 12.2 | PLINTH FRAME LIGHT | 1200 X 200 | 12.50 | 18006 |
| PFL 14.2 | PLINTH FRAME LIGHT | 1400 X 200 | 13.70 | 18008 |
| PFL 16.2 | PLINTH FRAME LIGHT | 1600 X 200 | 15.30 | 18010 |
| PFL 4.3 | PLINTH FRAME LIGHT | 400 X 300 | 3.49 | 17996 |
| PFL 6.3 | PLINTH FRAME LIGHT | 600 X 300 | 6.80 | 18014 |
| PFL 8.3 | PLINTH FRAME LIGHT | 800 X 300 | 10.11 | 18016 |
| PFL 10.3 | PLINTH FRAME LIGHT | 1000 X 300 | 11.63 | 18018 |
| PFL 12.3 | PLINTH FRAME LIGHT | 1200 X 300 | 13.40 | 18020 |
| PFL 14.3 | PLINTH FRAME LIGHT | 1400 X 300 | 14.65 | 18022 |
| PFL 16.3 | PLINTH FRAME LIGHT | 1600 X 300 | 16.16 | 18024 |

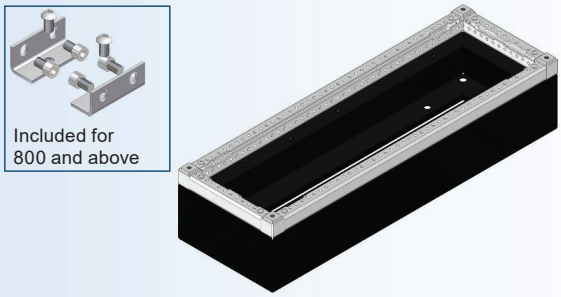


## PLINTH FRAME LIGHT WITH CORNER ASSEMBLY

## SOKKEL LIGHT MED HJØRNER OG SKINNER

| TYPE | DESCRIPTION | PANEL SIZE (W×D) | WEIGHT (kg) | ORDER No. RAL 7035 FTF. |
|---|---|---|---|---|
| PFLC 4.2 | PLINTH FRAME LIGHT WITH CORNER ASSEMBLY | 400 X 200 | 3.87 | 64894 |
| PFLC 6.2 | PLINTH FRAME LIGHT WITH CORNER ASSEMBLY | 600 X 200 | 7.20 | 64904 |
| PFLC 8.2 | PLINTH FRAME LIGHT WITH CORNER ASSEMBLY | 800 X 200 | 10.53 | 64924 |
| PFLC 10.2 | PLINTH FRAME LIGHT WITH CORNER ASSEMBLY | 1000 X 200 | 12.30 | 64944 |
| PFLC 12.2 | PLINTH FRAME LIGHT WITH CORNER ASSEMBLY | 1200 X 200 | 14.36 | 64964 |
| PFLC 14.2 | PLINTH FRAME LIGHT WITH CORNER ASSEMBLY | 1400 X 200 | 15.83 | 64854 |
| PFLC 16.2 | PLINTH FRAME LIGHT WITH CORNER ASSEMBLY | 1600 X 200 | 17.69 | 64874 |
| PFLC 4.3 | PLINTH FRAME LIGHT WITH CORNER ASSEMBLY | 400 X 300 | 4.67 | 64984 |
| PFLC 6.3 | PLINTH FRAME LIGHT WITH CORNER ASSEMBLY | 600 X 300 | 8.13 | 64914 |
| PFLC 8.3 | PLINTH FRAME LIGHT WITH CORNER ASSEMBLY | 800 X 300 | 11.57 | 64934 |
| PFLC 10.3 | PLINTH FRAME LIGHT WITH CORNER ASSEMBLY | 1000 X 300 | 13.36 | 64954 |
| PFLC 12.3 | PLINTH FRAME LIGHT WITH CORNER ASSEMBLY | 1200 X 300 | 15.40 | 64974 |
| PFLC 14.3 | PLINTH FRAME LIGHT WITH CORNER ASSEMBLY | 1400 X 300 | 16.91 | 64864 |
| PFLC 16.3 | PLINTH FRAME LIGHT WITH CORNER ASSEMBLY | 1600 X 300 | 18.69 | 64884 |

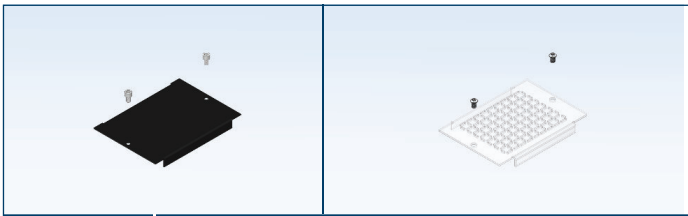

## GLANDS (FOR PLINTH FRAME LIGHT)

## FLANGER (TIL SOKKEL LIGHT)

| TYPE | DESCRIPTION | SIZE (W×D) | WEIGHT (kg) | ORDER No. |
|---|---|---|---|---|
| SGPFL 2 | STEEL GLAND PLATE | 200×100 | 0.19 | 18760 |
| PGPFL 2 | PC GLAND PLATE | 200×100 | 0.03 | 18762 |
| SGPFL 3 | STEEL GLAND PLATE | 300×100 | 0.28 | 18765 |
| PGPFL 3 | PC GLAND PLATE | 300×100 | 0.04 | 18767 |

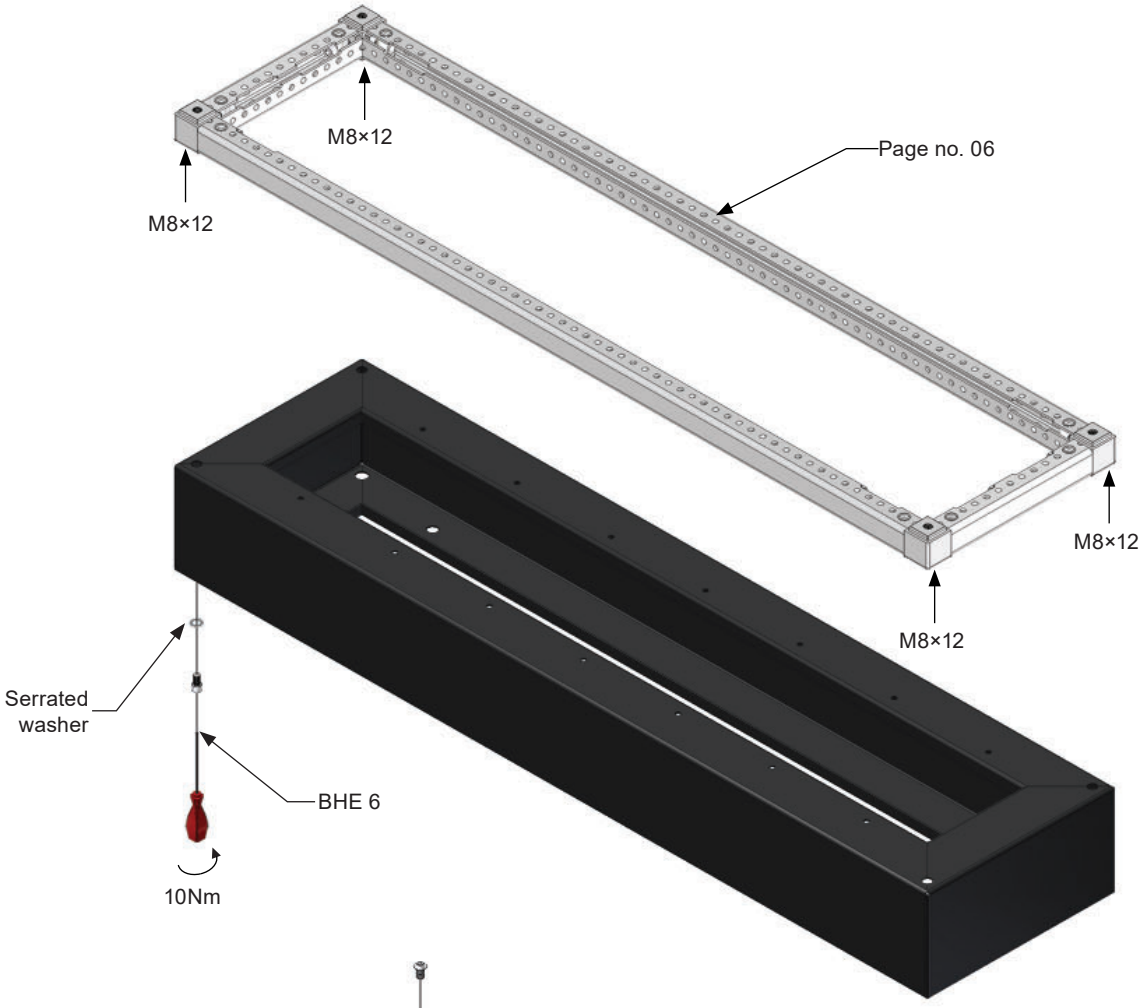
M8×12
M8×12
Page no. 06
M8×12
M8×12
Serrated washer
BHE 6
10Nm

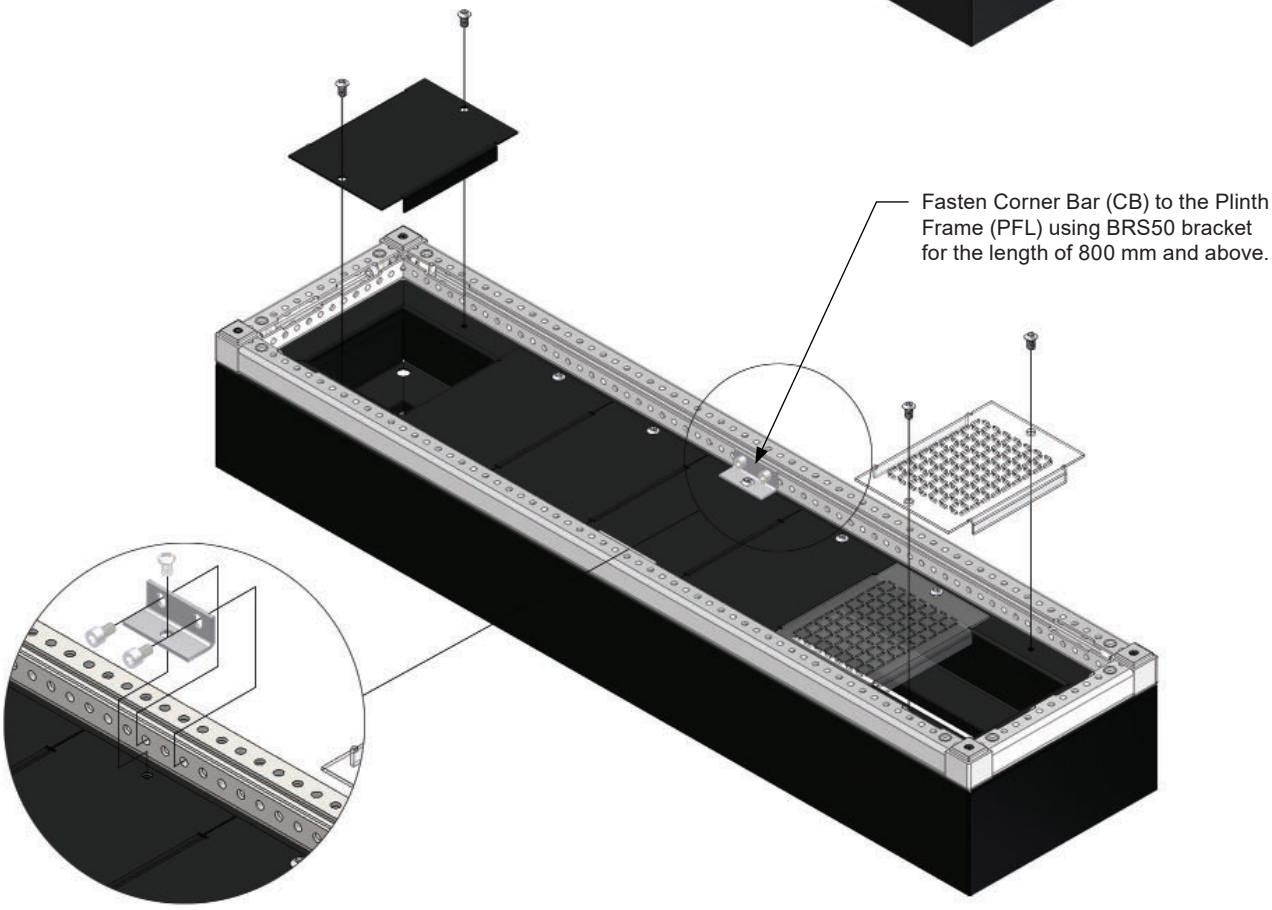
Fasten Corner Bar (CB) to the Plinth Frame (PFL) using BRS50 bracket for the length of 800 mm and above.

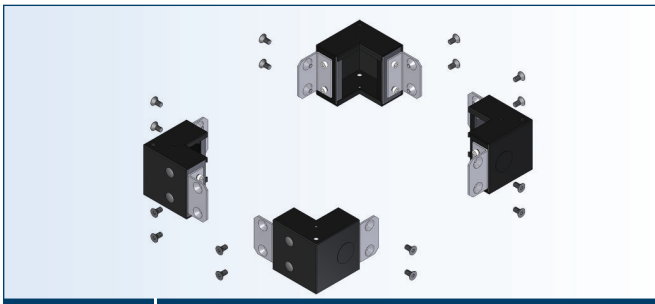

## PLINTH CORNERS

## SOKKEL HJØRNER

| TYPE | DESCRIPTION | CORNER SIZE | WEIGHT (kg) | ORDER NO. RAL 9005 SMF. |
|---|---|---|---|---|
| BFC | PLINTH CORNERS | 100X100 | 4.50 | 10000 |

## PLINTH PROFILES

## SOKKEL PROFIL

| TYPE | DESCRIPTION | PROFILE LENGTH | PANEL SIZE | WEIGHT (kg) | ORDER NO. RAL 9005 SMF. |
|---|---|---|---|---|---|
| BPP 3 | PLINTH PROFILES | 100 | 300 | 0.63 | 10030 |
| BPP 4 | PLINTH PROFILES | 200 | 400 | 1.31 | 10040 |
| BPP 6 | PLINTH PROFILES | 400 | 600 | 2.56 | 10050 |
| BPP 8 | PLINTH PROFILES | 600 | 800 | 3.83 | 10060 |
| BPP 10 | PLINTH PROFILES | 800 | 1000 | 5.26 | 10070 |
| BPP 12 | PLINTH PROFILES | 1000 | 1200 | 6.54 | 10080 |
| BPP 14 | PLINTH PROFILES | 1200 | 1400 | 7.83 | 10090 |
| BPP 16 | PLINTH PROFILES | 1400 | 1600 | 9.39 | 10100 |
| BPP 18 | PLINTH PROFILES | 1600 | 1800 | 10.46 | 10110 |
| BPP 20 | PLINTH PROFILES | 1800 | 2000 | 11.74 | 10120 |
| BPP 22 | PLINTH PROFILES | 2000 | 2200 | 13.39 | 10121 |
| BPP 24 | PLINTH PROFILES | 2200 | 2400 | 14.19 | 10122 |

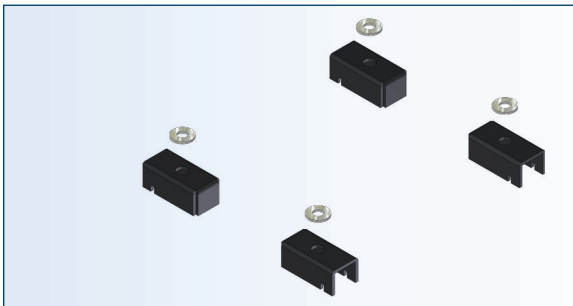

## CLAMPING BRACKETS (INTERNAL FIXING)

## GULV BESLAG (UDVENDIG)

| TYPE | DESCRIPTION | WEIGHT (kg) | ORDER NO. RAL 9005 SMF. |
|---|---|---|---|
| BCB | CLAMPING BRACKETS | 0.46 | 10150 |

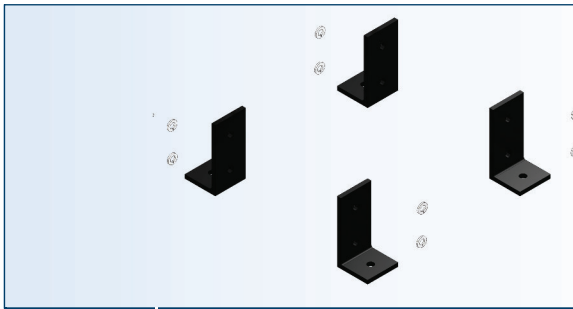

## CLAMPING ANGLES (EXTERNAL FIXING)

## GULV BESLAG (VINKEL)

| TYPE | DESCRIPTION | WEIGHT (kg) | ORDER NO. RAL 9005 SMF. |
|---|---|---|---|
| PCA | CLAMPING ANGLES | 1.35 | 10153 |

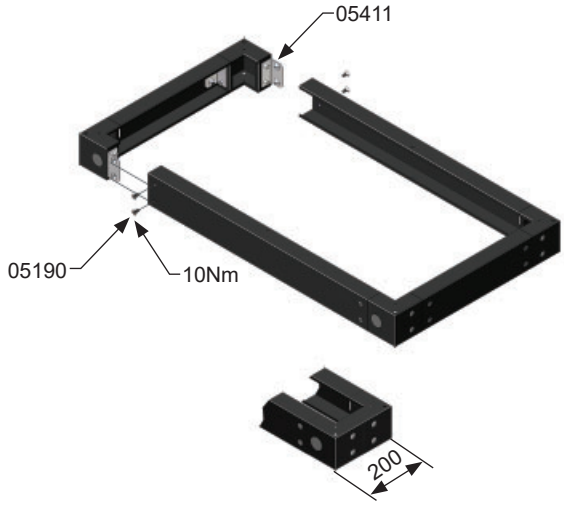


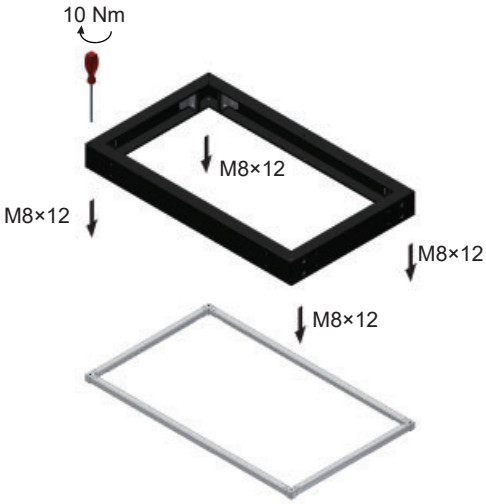

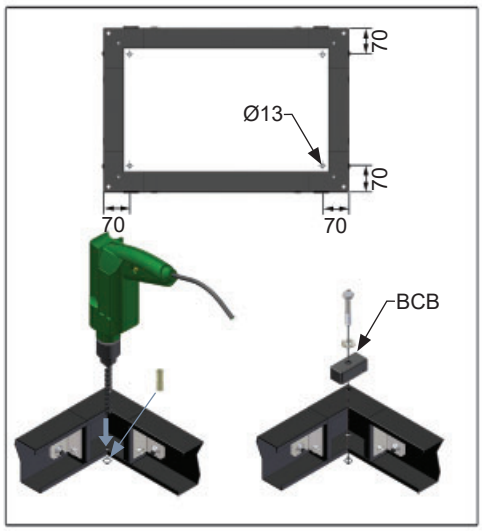


Clamping Bracket (Internal fixing)

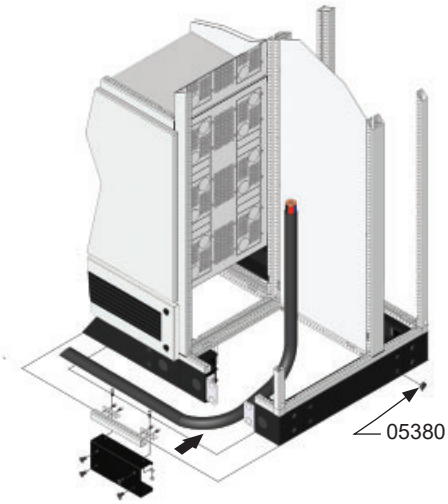


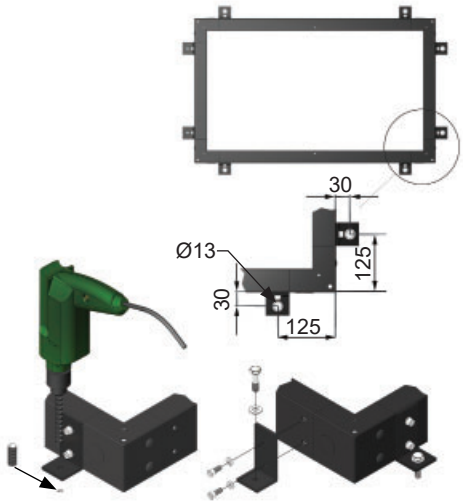


Clamping Angle (External fixing)

* The floor or the base must be levelled horizontally with the maximum deviation of ±1 mm per 1 meter, but no more than ±3 mm for the length of Panel.

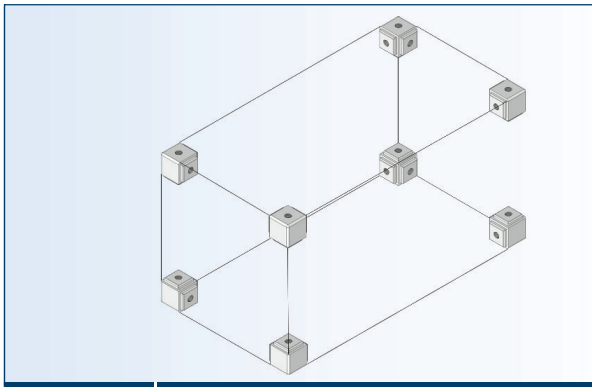

## CORNERS LIGHT

## HJØRNE LIGHT

| TYPE | DESCRIPTION | WEIGHT (kg) | ORDER No. RAL 7035 FTF. |
|---|---|---|---|
| CRL | CORNERS LIGHT | 0.41 | 18134 |

05391
M8
M8
M8
M8
M8
M8
M8

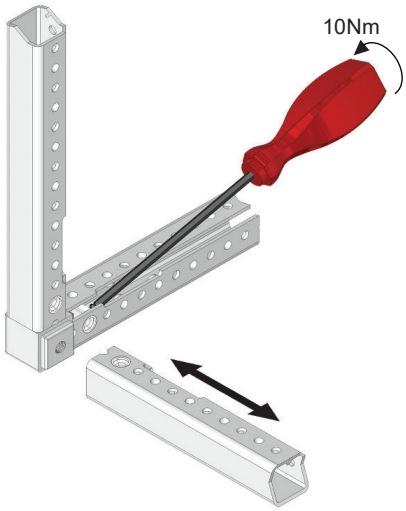
10Nm

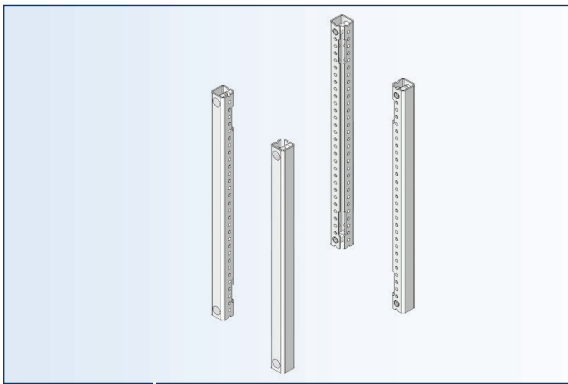

## CORNER BARS LIGHT

## HJØRNE SKINNER LIGHT

| TYPE | DESCRIPTION | PANEL SIZE | WEIGHT (kg) | ORDER No. RAL 7035 FTF. |
|---|---|---|---|---|
| CBL 2 | CORNER BARS LIGHT | 200 | 0.66 | 18154 |
| CBL 3 | CORNER BARS LIGHT | 300 | 0.91 | 18164 |
| CBL 4 | CORNER BARS LIGHT | 400 | 1.42 | 18174 |
| CBL 6 | CORNER BARS LIGHT | 600 | 1.68 | 18184 |
| CBL 8 | CORNER BARS LIGHT | 800 | 2.22 | 18194 |
| CBL 10 | CORNER BARS LIGHT | 1000 | 2.71 | 18204 |
| CBL 12 | CORNER BARS LIGHT | 1200 | 3.21 | 18214 |
| CBL 14 | CORNER BARS LIGHT | 1400 | 3.75 | 18224 |
| CBL 16 | CORNER BARS LIGHT | 1600 | 4.23 | 18234 |
| CBL 18 | CORNER BARS LIGHT | 1800 | 4.77 | 18244 |
| CBL 20 | CORNER BARS LIGHT | 2000 | 5.21 | 18254 |

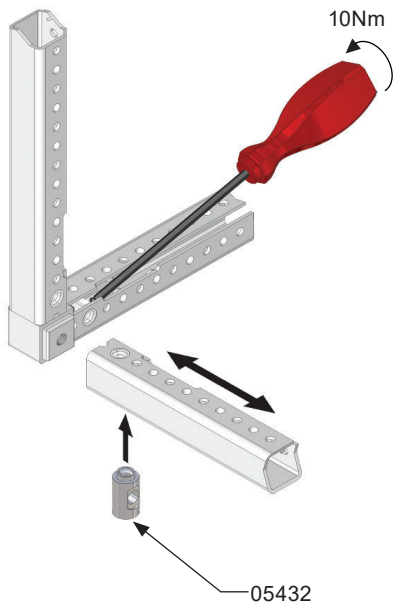


1

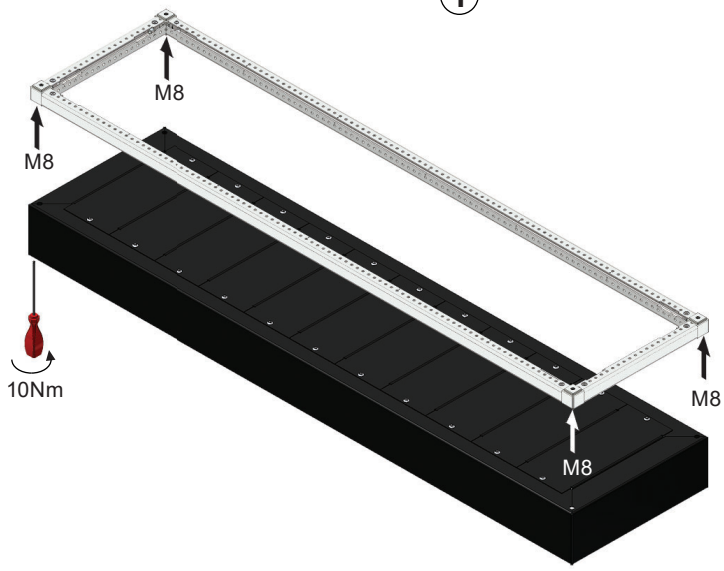


2

3

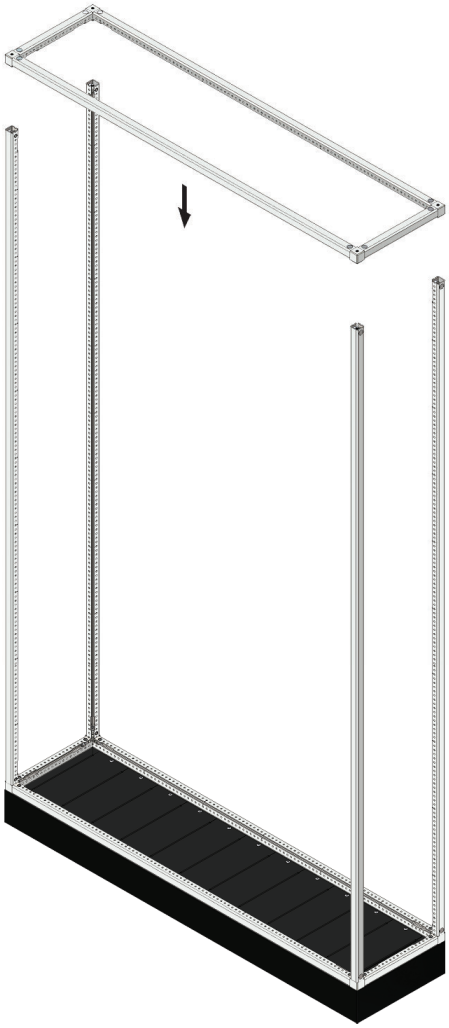

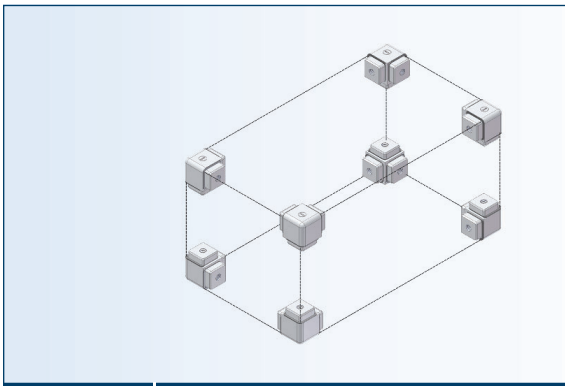

## CORNERS VERSION 2

## HJØRNER VERSION 2

| TYPE | DESCRIPTION | WEIGHT (kg) | VERSION 2 ORDER NO. RAL 7035 FTF. |
|---|---|---|---|
| CRS | CORNERS | 0.38 | 16584 |

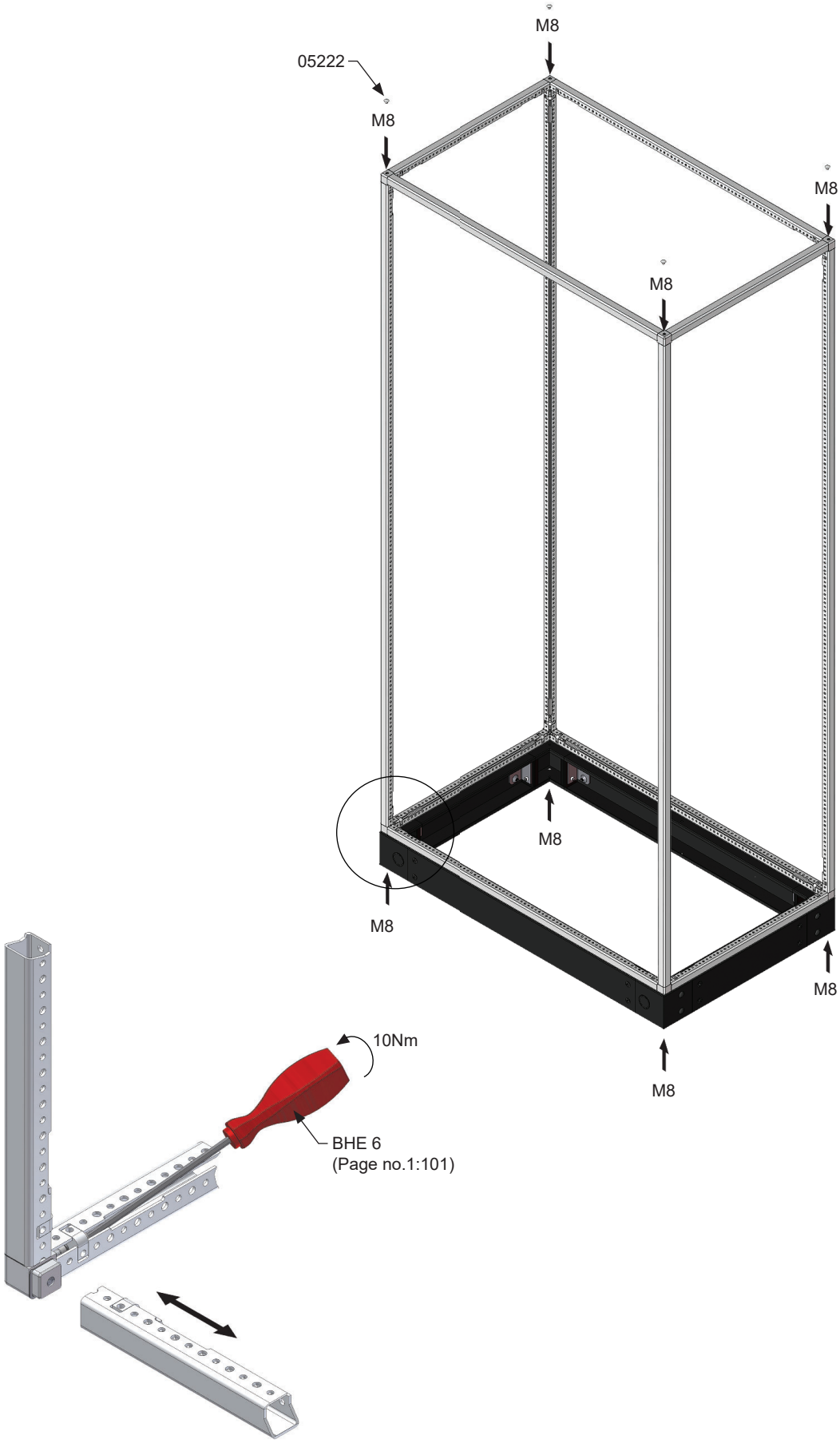


Version 2 Corners must be assembled with Version 2 Corner Bars.

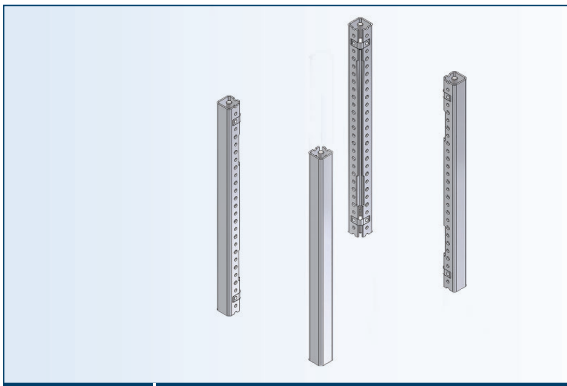

## CORNER BARS VERSION 2

## HJØRNE SKINNER VERSION 2

| TYPE | DESCRIPTION | PANEL SIZE | WEIGHT (kg) | VERSION 2 ORDER NO. RAL 7035 FTF. |
|---|---|---|---|---|
| CB 2 | CORNER BARS | 200 | 0.94 | 16614 |
| CB 3 | CORNER BARS | 300 | 1.42 | 16624 |
| CB 4 | CORNER BARS | 400 | 1.88 | 16634 |
| CB 6 | CORNER BARS | 600 | 2.78 | 16644 |
| CB 8 | CORNER BARS | 800 | 3.08 | 16654 |
| CB 10 | CORNER BARS | 1000 | 4.64 | 16664 |
| CB 12 | CORNER BARS | 1200 | 5.56 | 16674 |
| CB 14 | CORNER BARS | 1400 | 6.05 | 16684 |
| CB 16 | CORNER BARS | 1600 | 7.38 | 16694 |
| CB 18 | CORNER BARS | 1800 | 8.46 | 16704 |
| CB 20 | CORNER BARS | 2000 | 9.54 | 16714 |
| CB 22 | CORNER BARS | 2200 | 10.40 | 16724 |
| CB 24 | CORNER BARS | 2400 | 11.28 | 16734 |

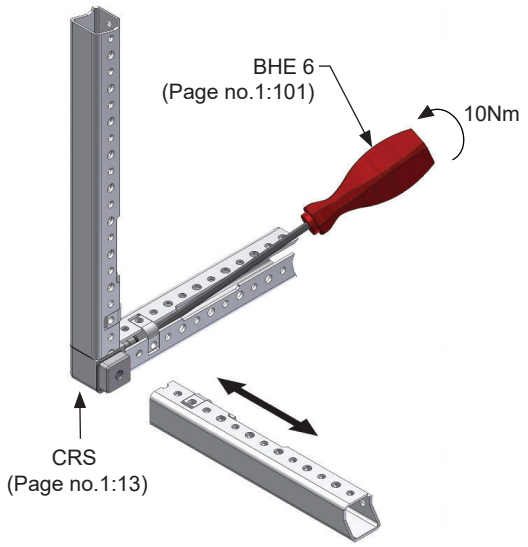


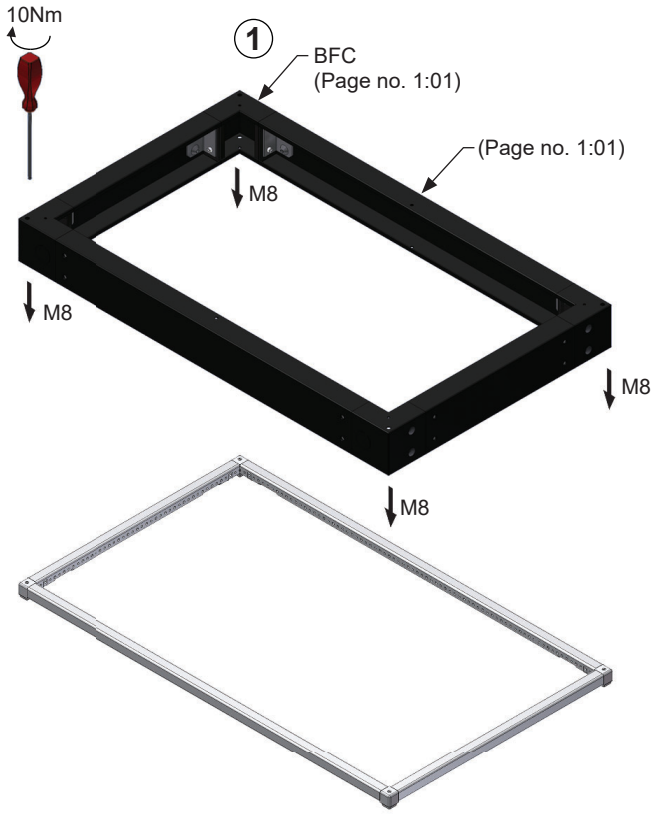


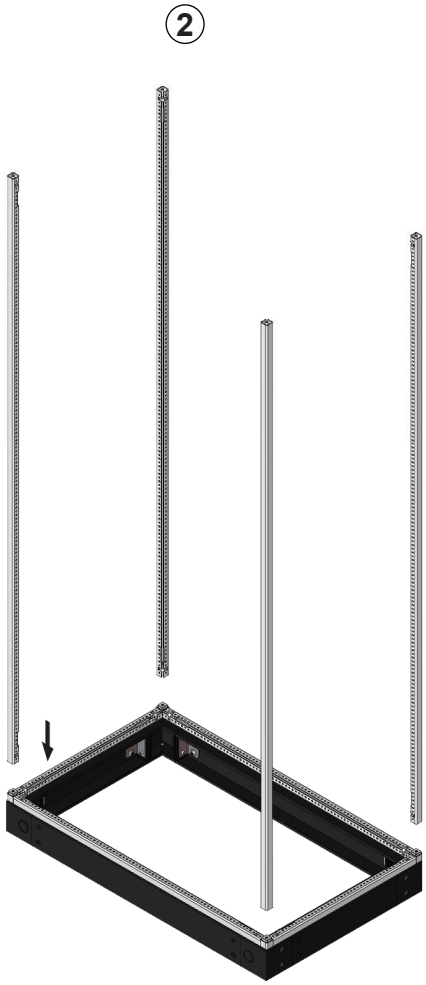


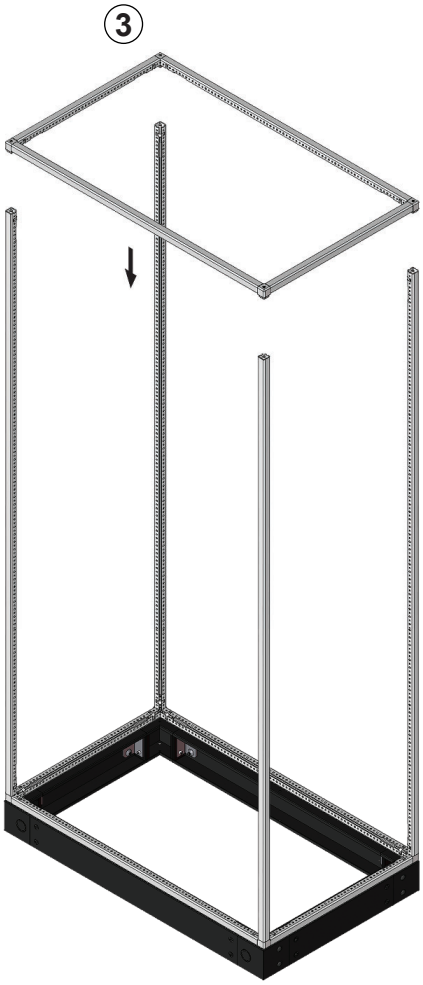


Version 2 Corners must be assembled with Version 2 Corner Bars.

## CROSS BAR LIGHT

## SPROSSE LIGHT

| TYPE | DESCRIPTION | PANEL SIZE | WEIGHT (kg) | ORDER No. RAL 7035 FTF. |
|---|---|---|---|---|
| CBSL 2 | CROSS BAR LIGHT | 200 | 0.16 | 18284 |
| CBSL 3 | CROSS BAR LIGHT | 300 | 0.24 | 18394 |
| CBSL 4 | CROSS BAR LIGHT | 400 | 0.37 | 18294 |
| CBSL 5 | CROSS BAR LIGHT | 500 | 0.45 | 18274 |
| CBSL 6 | CROSS BAR LIGHT | 600 | 0.58 | 18304 |
| CBSL 8 | CROSS BAR LIGHT | 800 | 0.79 | 18314 |
| CBSL 10 | CROSS BAR LIGHT | 1000 | 1.00 | 18324 |
| CBSL 12 | CROSS BAR LIGHT | 1200 | 1.22 | 18334 |
| CBSL 14 | CROSS BAR LIGHT | 1400 | 1.43 | 18344 |
| CBSL 16 | CROSS BAR LIGHT | 1600 | 1.64 | 18354 |
| CBSL 18 | CROSS BAR LIGHT | 1800 | 1.85 | 18364 |
| CBSL 20 | CROSS BAR LIGHT | 2000 | 2.06 | 18374 |

## CROSS BAR MOUNTING RAILS

## SPROSSE MONTAGE BESLAG

x8 Nos.

| TYPE | DESCRIPTION | PANEL SIZE | WEIGHT (kg) | ORDER No. |
|---|---|---|---|---|
| CBMR 2 | CROSS BAR MOUNTING RAILS | 200 | 0.46 | 80440 |
| CBMR 3 | CROSS BAR MOUNTING RAILS | 300 | 0.70 | 80442 |

Remove collar for internal cross bars only

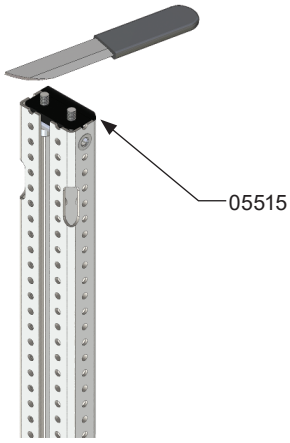


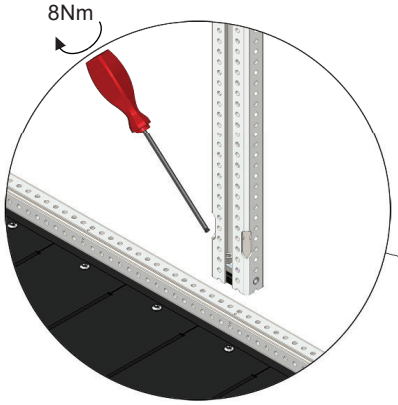


8 Nm torque must be applied to all accessories mounted on the panel structure

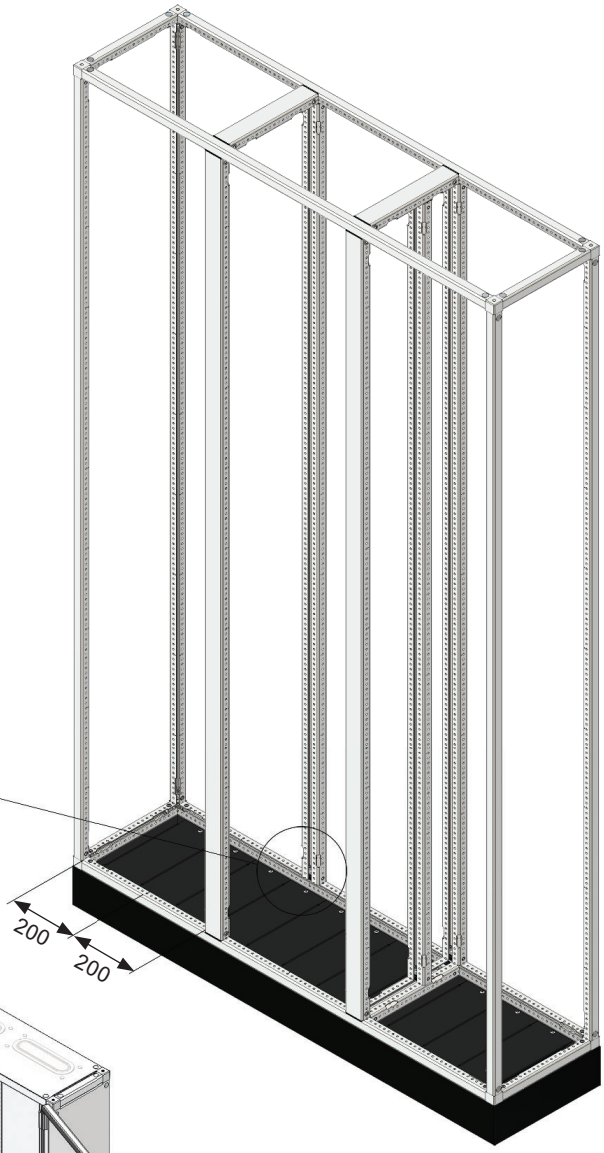


Tip!

**Crossbar mounting rails should be used when internal parts need to be installed in this location. They also provide additional stability to the panel frame.**

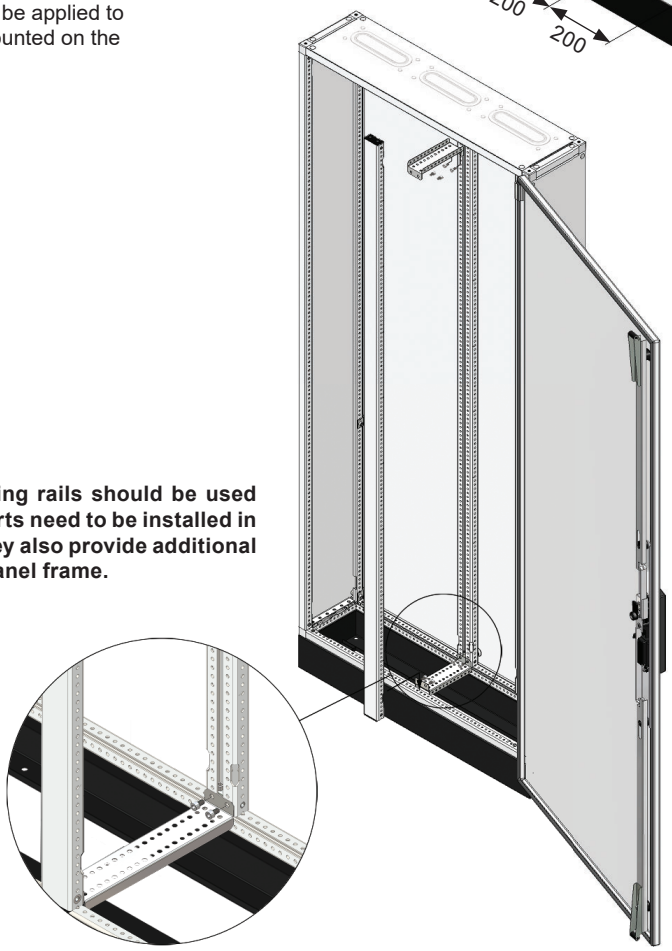

## INSTANT PLATE LIGHT

## INSTANT PLADE LIGHT

| TYPE | DESCRIPTION | PANEL SIZE (W×H) | WEIGHT (kg) | ORDER No. RAL 7035 FTF. |
|---|---|---|---|---|
| INTL 2.2 | INSTANT PLATE LIGHT | 200 × 200 | 0.47 | 80454 |
| INTL 2.4 | INSTANT PLATE LIGHT | 200 × 400 | 0.99 | 80464 |
| INTL 2.6 | INSTANT PLATE LIGHT | 200 × 600 | 1.50 | 80474 |
| INTL 2.8 | INSTANT PLATE LIGHT | 200 × 800 | 2.01 | 80484 |
| INTL 2.10 | INSTANT PLATE LIGHT | 200 ×1000 | 2.53 | 80494 |
| INTL 2.12 | INSTANT PLATE LIGHT | 200 ×1200 | 3.04 | 80504 |
| INTL 2.14 | INSTANT PLATE LIGHT | 200 ×1400 | 3.55 | 80514 |
| INTL 2.16 | INSTANT PLATE LIGHT | 200 ×1600 | 4.07 | 80524 |
| INTL 2.18 | INSTANT PLATE LIGHT | 200 ×1800 | 4.58 | 80534 |
| INTL 2.20 | INSTANT PLATE LIGHT | 200 ×2000 | 5.09 | 80544 |
| | | | | |
| INTL 3.2 | INSTANT PLATE LIGHT | 300 × 200 | 0.63 | 80574 |
| INTL 3.4 | INSTANT PLATE LIGHT | 300 × 400 | 1.31 | 80584 |
| INTL 3.6 | INSTANT PLATE LIGHT | 300 × 600 | 1.99 | 80594 |
| INTL 3.8 | INSTANT PLATE LIGHT | 300 × 800 | 2.68 | 80604 |
| INTL 3.10 | INSTANT PLATE LIGHT | 300 ×1000 | 3.36 | 80614 |
| INTL 3.12 | INSTANT PLATE LIGHT | 300 ×1200 | 4.05 | 80624 |
| INTL 3.14 | INSTANT PLATE LIGHT | 300 ×1400 | 4.73 | 80634 |
| INTL 3.16 | INSTANT PLATE LIGHT | 300 ×1600 | 5.41 | 80644 |
| INTL 3.18 | INSTANT PLATE LIGHT | 300 ×1800 | 6.09 | 80654 |
| INTL 3.20 | INSTANT PLATE LIGHT | 300 ×2000 | 6.77 | 80664 |

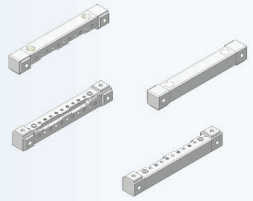

## CORNER ASSEMBLY KIT LIGHT

## HJØRNE SÆT

| TYPE | DESCRIPTION | PANEL SIZE | WEIGHT (kg) | ORDER No. RAL 7035 FTF. |
|---|---|---|---|---|
| CAKL 2 | CORNER ASSEMBLY KIT LIGHT | 200 | 2.0 | 80804 |
| CAKL 3 | CORNER ASSEMBLY KIT LIGHT | 300 | 3.0 | 80814 |

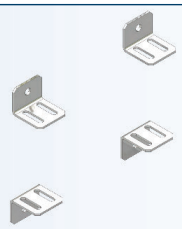

## WALL MOUNTING BRACKETS (FOR INSTANT PANEL)

## VÆG BESLAG (TIL INSTANT PLADE)

| TYPE | DESCRIPTION | WEIGHT (kg) | ORDER No. RAL 7035 FTF. |
|---|---|---|---|
| INWB | WALL MOUNTING BRACKETS | 0.30 | 80400 |

**Installation dimensions**

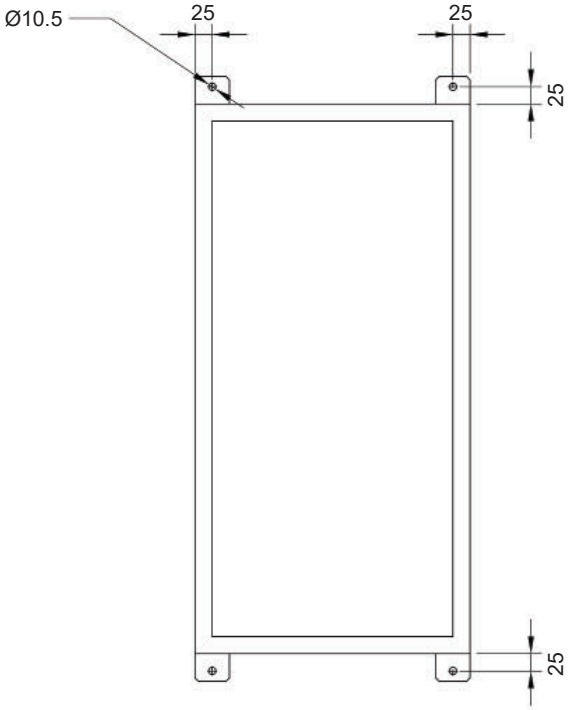


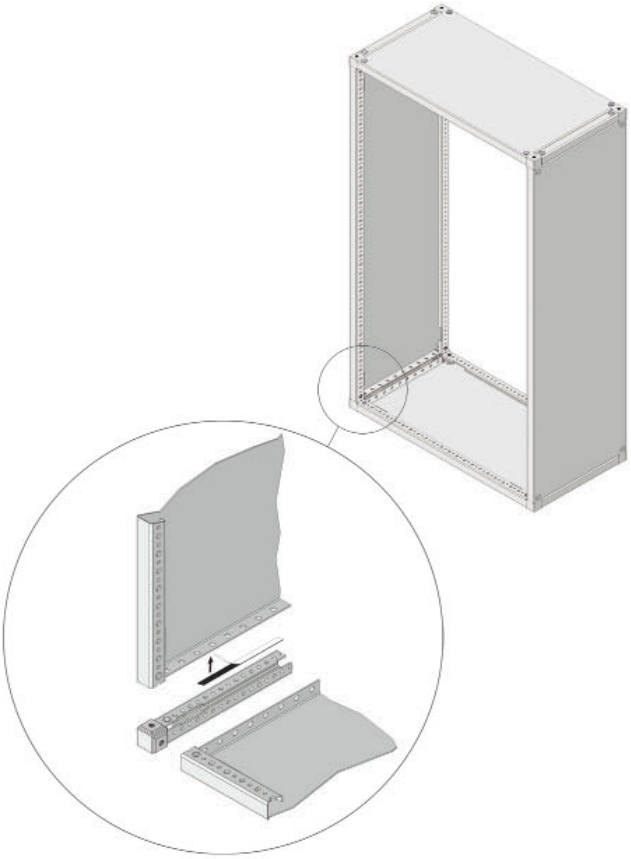

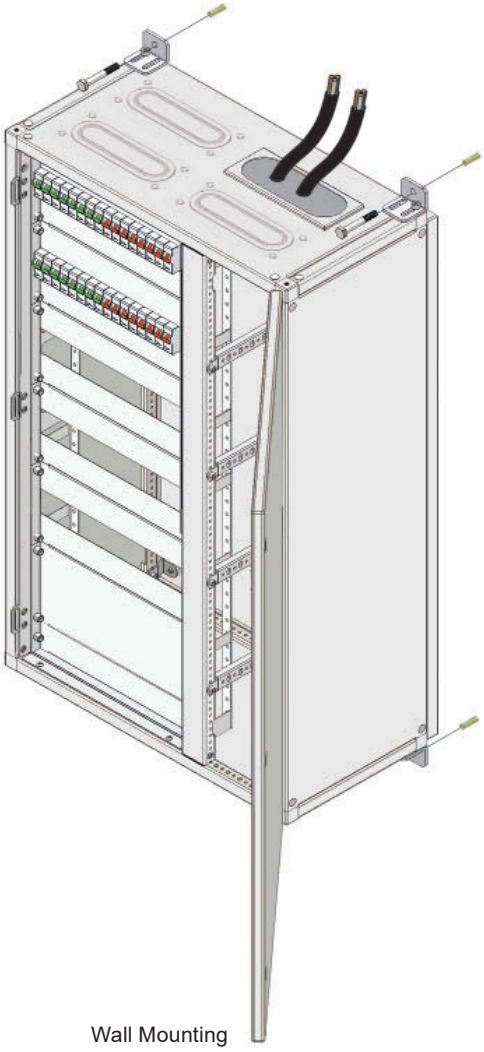

Wall Mounting

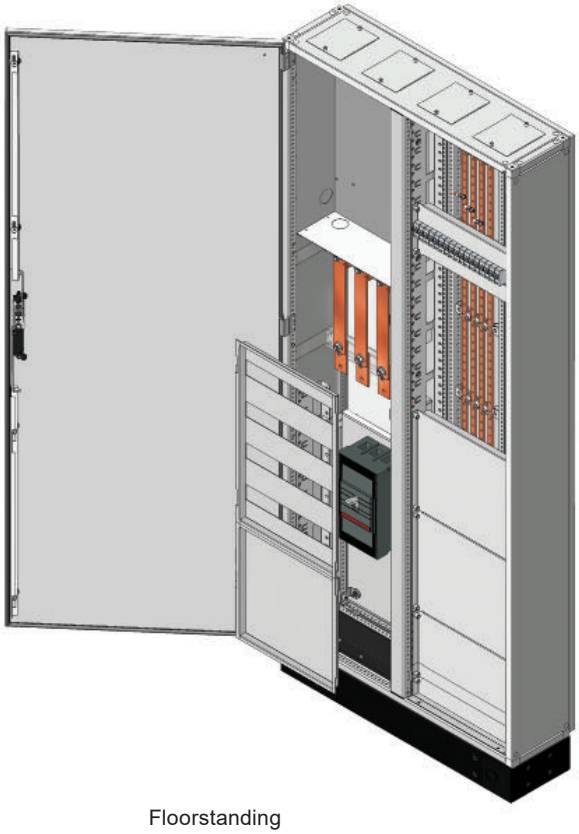

Floorstanding

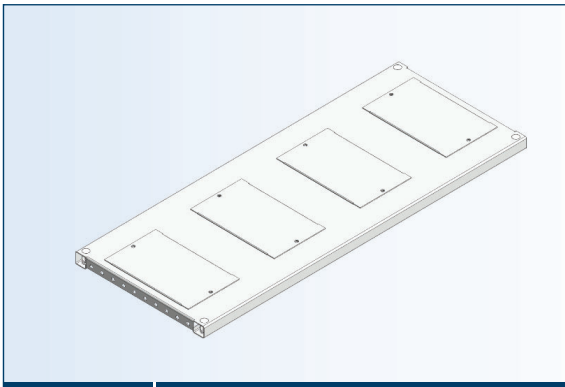

## INSTANT PLATE LIGHT WITH GLAND

## INSTANT PLADE LIGHT MED FLANGER

| TYPE | DESCRIPTION | SIZE (W×D) | WEIGHT (kg) | ORDER No. RAL 7035 FTF. |
|---|---|---|---|---|
| INLG 6.2 | INSTANT PLATE LIGHT WITH GLAND | 600 x 200 | 1.52 | 80834 |
| INLG 8.2 | INSTANT PLATE LIGHT WITH GLAND | 800 x 200 | 2.10 | 80844 |
| INLG 10.2 | INSTANT PLATE LIGHT WITH GLAND | 1000 x 200 | 2.60 | 80854 |
| INLG 12.2 | INSTANT PLATE LIGHT WITH GLAND | 1200 x 200 | 3.50 | 80864 |
| INLG 14.2 | INSTANT PLATE LIGHT WITH GLAND | 1400 x 200 | 3.65 | 80874 |
| INLG 16.2 | INSTANT PLATE LIGHT WITH GLAND | 1600 x 200 | 4.10 | 80884 |
| INLG 6.3 | INSTANT PLATE LIGHT WITH GLAND | 600 x 300 | 2.00 | 80894 |
| INLG 8.3 | INSTANT PLATE LIGHT WITH GLAND | 800 x 300 | 2.70 | 80904 |
| INLG 10.3 | INSTANT PLATE LIGHT WITH GLAND | 1000 x 300 | 3.40 | 80914 |
| INLG 12.3 | INSTANT PLATE LIGHT WITH GLAND | 1200 x 300 | 4.06 | 80924 |
| INLG 14.3 | INSTANT PLATE LIGHT WITH GLAND | 1400 x 300 | 4.80 | 80934 |
| INLG 16.3 | INSTANT PLATE LIGHT WITH GLAND | 1600 x 300 | 5.50 | 80944 |

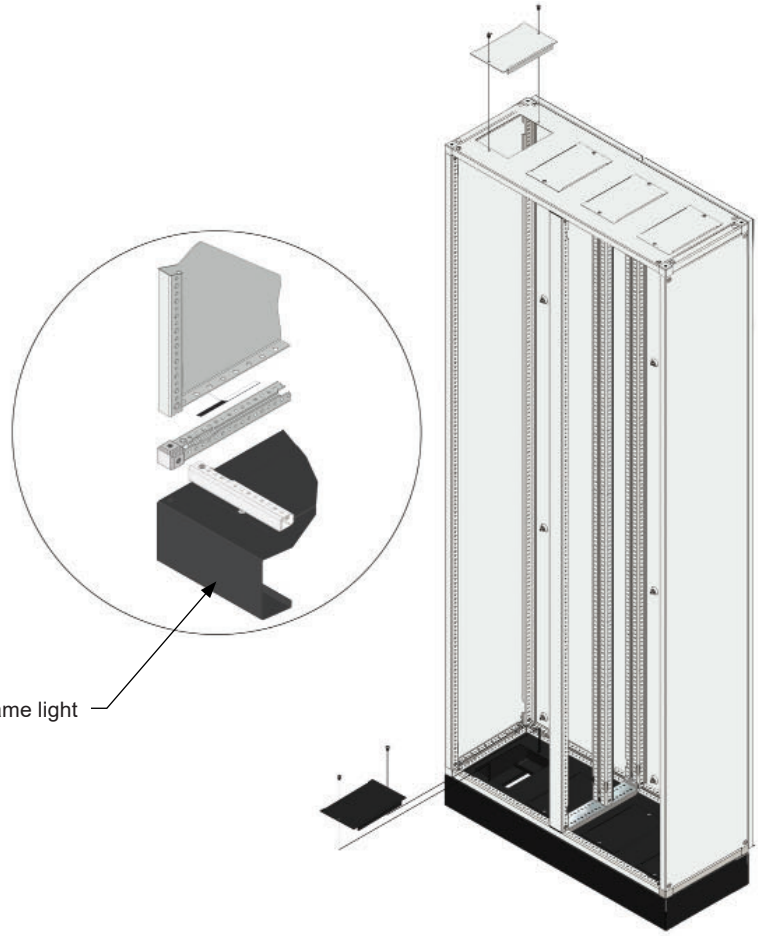


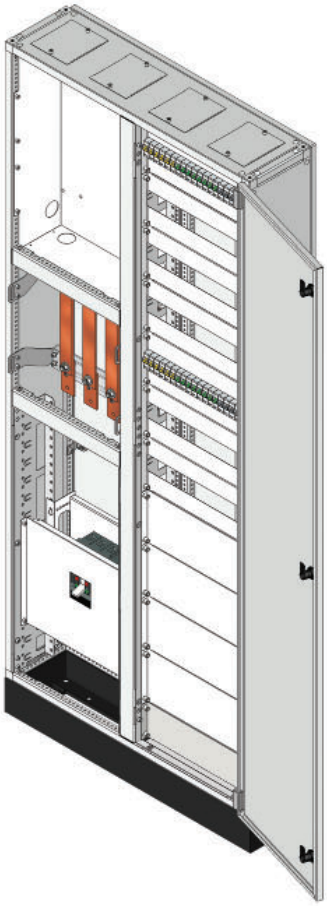

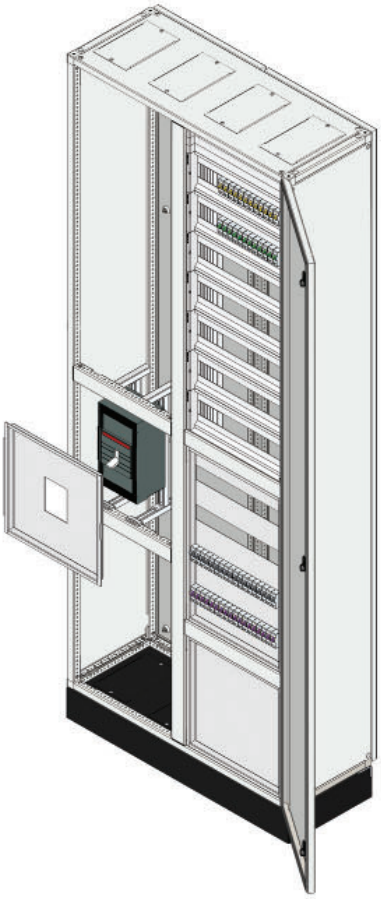

With TM inserts

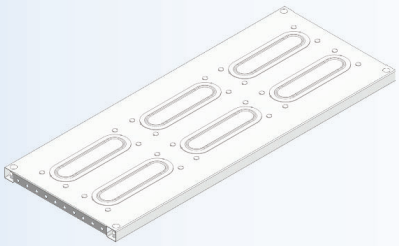

## INSTANT PLATE LIGHT WITH GLAND HOLES

## INSTANT PLADE LIGHT MED FLANGE HULLER

FL 21 Glands

| TYPE | DESCRIPTION | SIZE (W×D) | NO.OF GLANDS | WEIGHT (kg) | ORDER No. RAL 7035 SMF. |
|---|---|---|---|---|---|
| INLGD 4.2-1 | INS. PLATE LIGHT WITH GLAND HOLES | 400 X 200 | 1 | 1.02 | 65044 |
| INLGD 6.2-1 | INS. PLATE LIGHT WITH GLAND HOLES | 600 X 200 | 2 | 1.52 | 65054 |
| INLGD 8.2-1 | INS. PLATE LIGHT WITH GLAND HOLES | 800 X 200 | 3 | 2.10 | 65064 |
| INLGD 10.2-1 | INS. PLATE LIGHT WITH GLAND HOLES | 1000 X 200 | 4 | 2.60 | 65074 |
| INLGD 12.2-1 | INS. PLATE LIGHT WITH GLAND HOLES | 1200 X 200 | 5 | 3.50 | 65084 |
| INLGD 14.2-1 | INS. PLATE LIGHT WITH GLAND HOLES | 1400 X 200 | 5 | 3.65 | 65094 |
| INLGD 16.2-1 | INS. PLATE LIGHT WITH GLAND HOLES | 1600 X 200 | 6 | 4.10 | 65104 |
| INLGD 4.3-1 | INS. PLATE LIGHT WITH GLAND HOLES | 400 X 300 | 2 | 1.34 | 65114 |
| INLGD 6.3-1 | INS. PLATE LIGHT WITH GLAND HOLES | 600 X 300 | 4 | 2.00 | 65124 |
| INLGD 8.3-1 | INS. PLATE LIGHT WITH GLAND HOLES | 800 X 300 | 6 | 2.70 | 65134 |
| INLGD 10.3-1 | INS. PLATE LIGHT WITH GLAND HOLES | 1000 X 300 | 8 | 3.40 | 65144 |
| INLGD 12.3-1 | INS. PLATE LIGHT WITH GLAND HOLES | 1200 X 300 | 10 | 4.06 | 65154 |
| INLGD 14.3-1 | INS. PLATE LIGHT WITH GLAND HOLES | 1400 X 300 | 10 | 4.80 | 65164 |
| INLGD 16.3-1 | INS. PLATE LIGHT WITH GLAND HOLES | 1600 X 300 | 12 | 5.50 | 65174 |

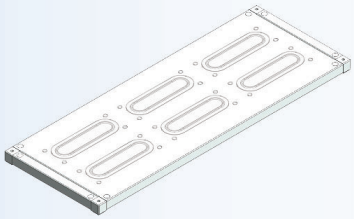

## INSTANT PLATE LIGHT WITH GLAND HOLES & CORNERS

## INSTANT PLADE LIGHT MED FLANGE HULLER OG HJØRNER

With corner assembly kit

FL21 Glands

| TYPE | DESCRIPTION | SIZE (W×D) | NO.OF GLANDS | WEIGHT (kg) | ORDER No. RAL 7035 FTF. |
|---|---|---|---|---|---|
| INLGC 4.2-1 | INS. PL. LIGHT WITH GLAND HOLES & CORNERS | 400 X 200 | 1 | 1.58 | 65764 |
| INLGC 6.2-1 | INS. PL. LIGHT WITH GLAND HOLES & CORNERS | 600 X 200 | 2 | 2.12 | 65804 |
| INLGC 8.2-1 | INS. PL. LIGHT WITH GLAND HOLES & CORNERS | 800 X 200 | 3 | 2.70 | 65814 |
| INLGC 10.2-1 | INS. PL. LIGHT WITH GLAND HOLES & CORNERS | 1000 X 200 | 4 | 3.20 | 65824 |
| INLGC 12.2-1 | INS. PL. LIGHT WITH GLAND HOLES & CORNERS | 1200 X 200 | 5 | 4.10 | 65834 |
| INLGC 14.2-1 | INS. PL. LIGHT WITH GLAND HOLES & CORNERS | 1400 X 200 | 5 | 4.25 | 65784 |
| INLGC 16.2-1 | INS. PL. LIGHT WITH GLAND HOLES & CORNERS | 1600 X 200 | 6 | 4.10 | 65794 |
| INLGC 4.3-1 | INS. PL. LIGHT WITH GLAND HOLES & CORNERS | 400 X 300 | 2 | 2.03 | 65774 |
| INLGC 6.3-1 | INS. PL. LIGHT WITH GLAND HOLES & CORNERS | 600 X 300 | 4 | 2.73 | 65844 |
| INLGC 8.3-1 | INS. PL. LIGHT WITH GLAND HOLES & CORNERS | 800 X 300 | 6 | 3.43 | 65854 |
| INLGC 10.3-1 | INS. PL. LIGHT WITH GLAND HOLES & CORNERS | 1000 X 300 | 8 | 4.13 | 65864 |
| INLGC 12.3-1 | INS. PL. LIGHT WITH GLAND HOLES & CORNERS | 1200 X 300 | 10 | 4.79 | 65874 |
| INLGC 14.3-1 | INS. PL. LIGHT WITH GLAND HOLES & CORNERS | 1400 X 300 | 10 | 5.53 | 65884 |
| INLGC 16.3-1 | INS. PL. LIGHT WITH GLAND HOLES & CORNERS | 1600 X 300 | 12 | 6.23 | 65894 |

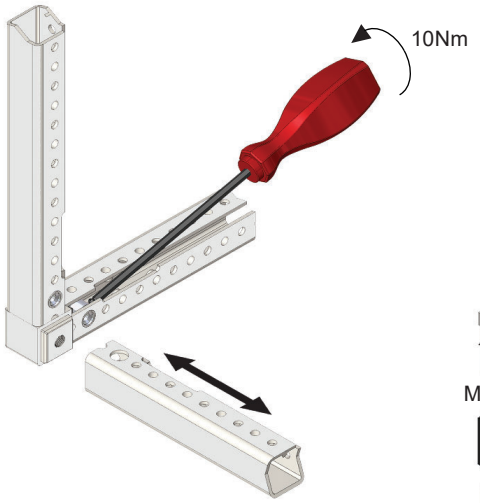
10Nm

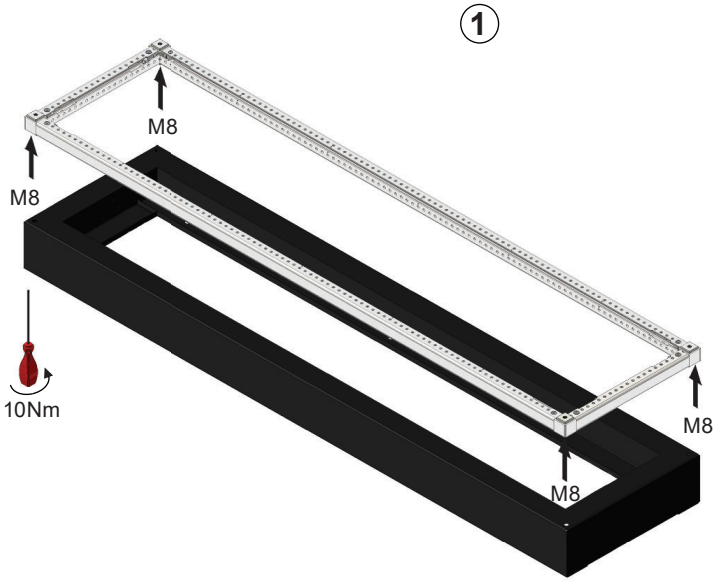
1
M8
M8
10Nm
M8
M8

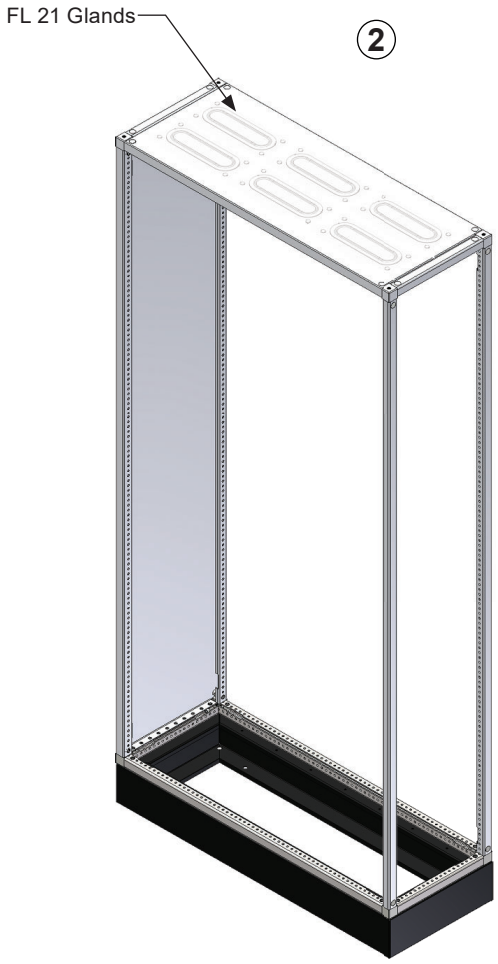
FL 21 Glands
2

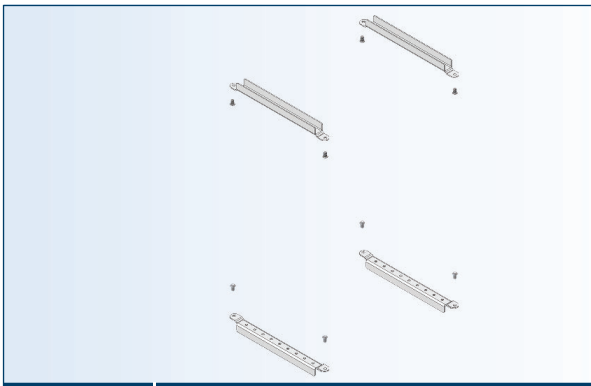

## INSTANT PANEL DEPTH PROFILES (FOR MOUNTING PLATE)

## INSTANT PLADE DYBDE PROFIL (TIL MONTAGE PLADE)

| TYPE | DESCRIPTION | PANEL DEPTH | WEIGHT (kg) | ORDER No. RAL 9010 SMF. |
|---|---|---|---|---|
| IPDP 2 | INSTANT PANEL DEPTH PROFILES | 200 | 0.60 | 80410 |
| IPDP 3 | INSTANT PANEL DEPTH PROFILES | 300 | 0.92 | 80412 |
| IPDP 4 | INSTANT PANEL DEPTH PROFILES | 400 | 1.32 | 80414 |

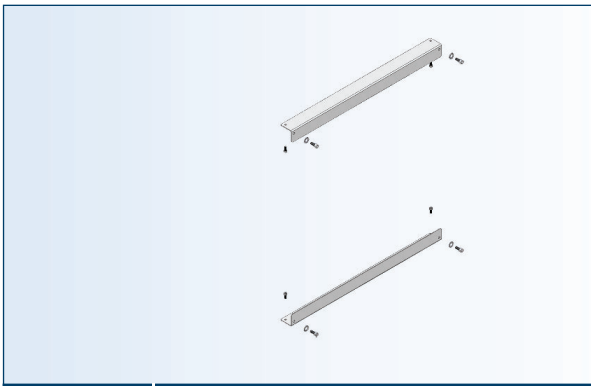

## INSTANT PANEL WIDTH PROFILES (FOR MOUNTING PLATE)

## INSTANT PLADE VINKEL PROFIL (TIL MONTAGE PLADE)

| TYPE | DESCRIPTION | PANEL WIDTH | WEIGHT (kg) | ORDER No. RAL 9010 SMF. |
|---|---|---|---|---|
| IPWP 2 | INSTANT PANEL WIDTH PROFILES | 200 | 0.4 | 80420 |
| IPWP 4 | INSTANT PANEL WIDTH PROFILES | 400 | 1.03 | 80422 |
| IPWP 6 | INSTANT PANEL WIDTH PROFILES | 600 | 1.63 | 80424 |
| IPWP 8 | INSTANT PANEL WIDTH PROFILES | 800 | 2.23 | 80426 |
| IPWP 10 | INSTANT PANEL WIDTH PROFILES | 1000 | 2.82 | 80428 |
| IPWP 12 | INSTANT PANEL WIDTH PROFILES | 1200 | 3.26 | 80430 |

For V1 Mounting plate

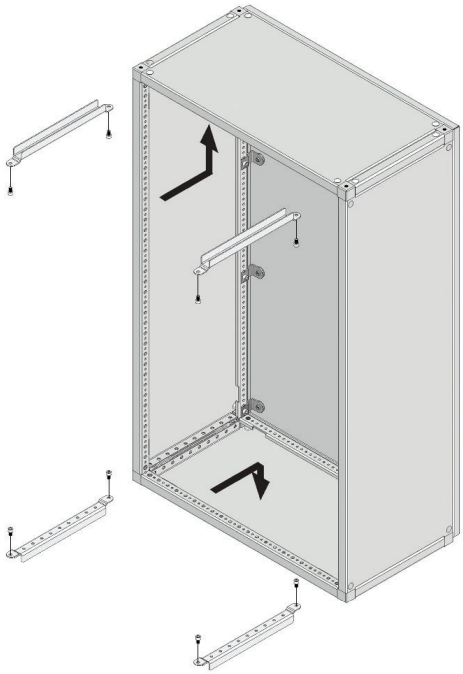

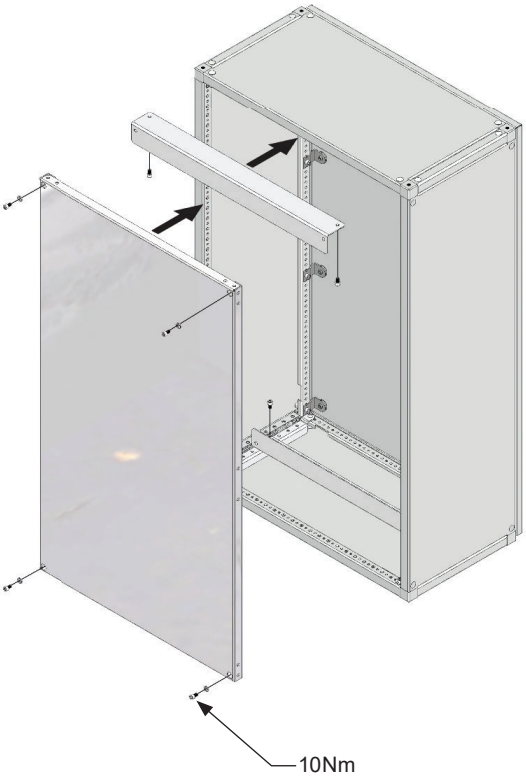
10Nm

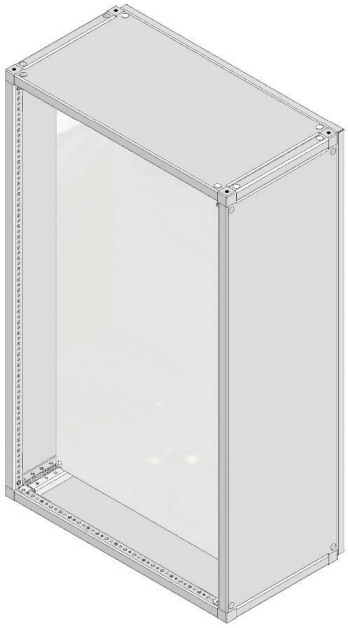

## GLAND PLATE

## FLANGER

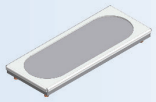

Quick gland plate

x 04 Nos.

Steel gland plate

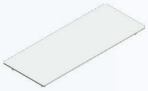

Steel gland plate with stud

| TYPE | DESCRIPTION | SIZE (W×H) | WEIGHT (kg) | ORDER No. RAL 7035 FTF. |
|---|---|---|---|---|
| QG | QUICK GLAND PLATE | 216 × 86 | 0.32 | 14734 |
| SG 216 | STEEL GLAND PLATE | 216 × 86 | 0.24 | 14724 |
| SGSG 216 | STEEL GLAND PLATE WITH STUD | 216 × 86 | 0.32 | 51005 |

## FL21 GLAND PLATE

## FL21 FLANGER

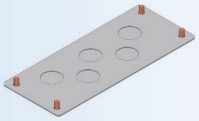

Without Gasket

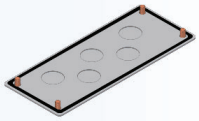

With Gasket

| TYPE | DESCRIPTION | GLAND PLATE SIZE (W×H) | CABLE HOLE SIZE (Ø) | NO. OF CABLE HOLES | WEIGHT (kg) | ORDER No. Without Gasket RAL 7035 FTF. | ORDER No. With Gasket RAL 7035 FTF. |
|---|---|---|---|---|---|---|---|
| FL21-12 | FL21 GLAND PLATE | 214 × 88 | 12 | 23 | 0.220 | 66334 | 66339 |
| FL21-16 | FL21 GLAND PLATE | 214 × 88 | 16 | 14 | 0.219 | 66344 | 66349 |
| FL21-16.20 | FL21 GLAND PLATE | 214 × 88 | 16/20 | 8/6 | 0.217 | 66354 | 66359 |
| FL21-20 | FL21 GLAND PLATE | 214 × 88 | 20 | 10 | 0.215 | 66364 | 66369 |
| FL21-25 | FL21 GLAND PLATE | 214 × 88 | 25 | 5 | 0.224 | 66374 | 66379 |
| FL21-32 | FL21 GLAND PLATE | 214 × 88 | 32 | 3 | 0.227 | 66384 | 66389 |
| FL21-40 | FL21 GLAND PLATE | 214 × 88 | 40 | 3 | 0.210 | 66394 | 66399 |
| FL21-50 | FL21 GLAND PLATE | 214 × 88 | 50 | 2 | 0.208 | 66404 | 66409 |

Tip!
**Quick glands saves installation time.**

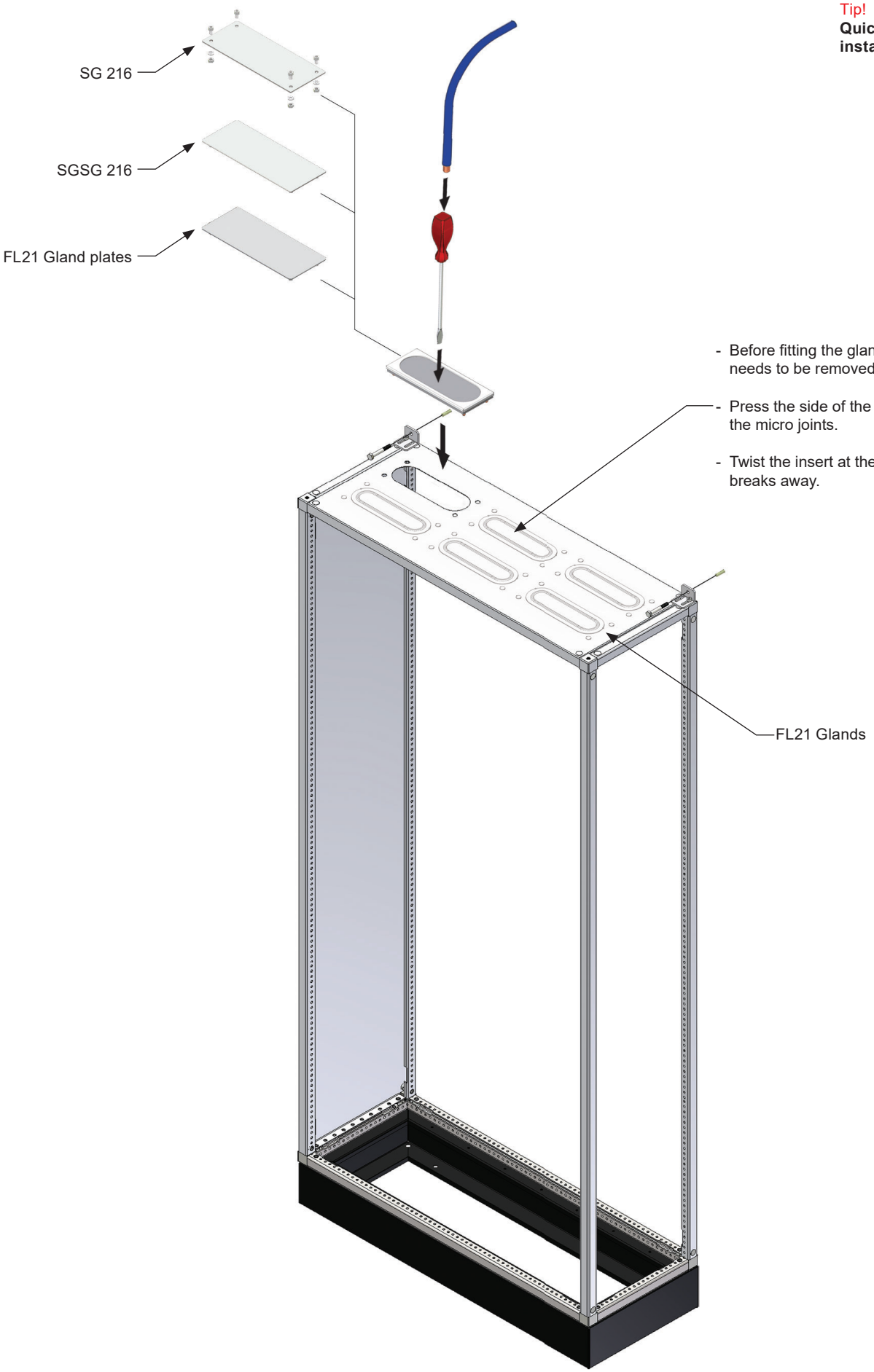


- Before fitting the gland plate the insert needs to be removed.
- Press the side of the insert furthest from the micro joints.
- Twist the insert at the micro joints until it breaks away.

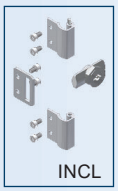

## DOOR LIGHT

## DØR LIGHT

| TYPE | DESCRIPTION | SIZE (W×H) | LOCKS | WEIGHT (kg) | VERSION 3 ORDER No. RAL 7035 FTF. |
|---|---|---|---|---|---|
| DOL 2.2 | DOOR LIGHT | 200 × 200 | 1 | 0.51 | 18407 |
| DOL 2.4 | DOOR LIGHT | 200 × 400 | 2 | 0.92 | 18417 |
| DOL 2.6 | DOOR LIGHT | 200 × 600 | 2 | 1.33 | 18427 |
| DOL 2.8 | DOOR LIGHT | 200 × 800 | 3 | 1.75 | 18437 |
| DOL 2.10 | DOOR LIGHT | 200 × 1000 | 3 | 2.16 | 18447 |
| DOL 2.12 | DOOR LIGHT | 200 × 1200 | 3 | 2.58 | 18457 |
| DOL 2.14 | DOOR LIGHT | 200 × 1400 | 3 | 2.99 | 18467 |
| DOL 2.16 | DOOR LIGHT | 200 × 1600 | 4 | 3.41 | 18477 |
| DOL 2.18 | DOOR LIGHT | 200 × 1800 | 4 | 3.82 | 18487 |
| DOL 2.20 | DOOR LIGHT | 200 × 2000 | 4 | 4.24 | 18497 |
| DOL 3.2 | DOOR LIGHT | 300 × 200 | 1 | 0.76 | 27887 |
| DOL 3.4 | DOOR LIGHT | 300 × 400 | 2 | 1.07 | 27897 |
| DOL 3.6 | DOOR LIGHT | 300 × 600 | 2 | 1.50 | 27907 |
| DOL 3.8 | DOOR LIGHT | 300 × 800 | 3 | 1.92 | 27917 |
| DOL 3.10 | DOOR LIGHT | 300 × 1000 | 3 | 2.40 | 27927 |
| DOL 3.12 | DOOR LIGHT | 300 × 1200 | 3 | 2.76 | 28047 |
| DOL 3.14 | DOOR LIGHT | 300 × 1400 | 3 | 3.17 | 28057 |
| DOL 3.16 | DOOR LIGHT | 300 × 1600 | 4 | 3.66 | 28067 |
| DOL 3.18 | DOOR LIGHT | 300 × 1800 | 4 | 4.01 | 28077 |
| DOL 3.20 | DOOR LIGHT | 300 × 2000 | 4 | 4.60 | 28087 |
| DOL 4.2 | DOOR LIGHT | 400 × 200 | 1 | 0.92 | 18527 |
| DOL 4.3 | DOOR LIGHT | 400 × 300 | 1 | 1.10 | 18517 |
| DOL 4.4 | DOOR LIGHT | 400 × 400 | 2 | 1.67 | 18537 |
| DOL 4.6 | DOOR LIGHT | 400 × 600 | 2 | 2.43 | 18547 |
| DOL 4.8 | DOOR LIGHT | 400 × 800 | 3 | 3.18 | 18557 |
| DOL 4.10 | DOOR LIGHT | 400 × 1000 | 3 | 3.94 | 18567 |
| DOL 4.12 | DOOR LIGHT | 400 × 1200 | 3 | 4.69 | 18577 |
| DOL 4.14 | DOOR LIGHT | 400 × 1400 | 3 | 5.45 | 18587 |
| DOL 4.16 | DOOR LIGHT | 400 × 1600 | 4 | 6.20 | 18597 |
| DOL 4.18 | DOOR LIGHT | 400 × 1800 | 4 | 6.96 | 18607 |
| DOL 4.20 | DOOR LIGHT | 400 × 2000 | 4 | 7.71 | 18617 |
| DOL 5.2 | DOOR LIGHT | 500 × 200 | 1 | 1.20 | 27937 |
| DOL 5.4 | DOOR LIGHT | 500 × 400 | 2 | 1.99 | 27947 |
| DOL 5.6 | DOOR LIGHT | 500 × 600 | 2 | 2.77 | 27957 |
| DOL 5.8 | DOOR LIGHT | 500 × 800 | 3 | 3.56 | 27967 |
| DOL 5.10 | DOOR LIGHT | 500 × 1000 | 3 | 4.34 | 27977 |
| DOL 5.12 | DOOR LIGHT | 500 × 1200 | 3 | 5.13 | 28097 |
| DOL 5.14 | DOOR LIGHT | 500 × 1400 | 3 | 5.91 | 28107 |
| DOL 5.16 | DOOR LIGHT | 500 × 1600 | 4 | 6.70 | 28117 |
| DOL 5.18 | DOOR LIGHT | 500 × 1800 | 4 | 7.48 | 28127 |
| DOL 5.20 | DOOR LIGHT | 500 × 2000 | 4 | 8.27 | 28137 |
| DOL 6.2 | DOOR LIGHT | 600 × 200 | 1 | 1.33 | 18637 |
| DOL 6.3 | DOOR LIGHT | 600 × 300 | 1 | 1.52 | 18737 |
| DOL 6.4 | DOOR LIGHT | 600 × 400 | 2 | 2.43 | 18647 |
| DOL 6.6 | DOOR LIGHT | 600 × 600 | 2 | 3.52 | 18657 |
| DOL 6.8 | DOOR LIGHT | 600 × 800 | 3 | 4.62 | 18667 |
| DOL 6.10 | DOOR LIGHT | 600 × 1000 | 3 | 5.71 | 18677 |
| DOL 6.12 | DOOR LIGHT | 600 × 1200 | 3 | 6.81 | 18687 |
| DOL 6.14 | DOOR LIGHT | 600 × 1400 | 3 | 7.90 | 18697 |
| DOL 6.16 | DOOR LIGHT | 600 × 1600 | 4 | 8.99 | 18707 |
| DOL 6.18 | DOOR LIGHT | 600 × 1800 | 4 | 10.09 | 18717 |
| DOL 6.20 | DOOR LIGHT | 600 × 2000 | 4 | 11.18 | 18727 |
| DOL 8.14 | DOOR LIGHT | 800 × 1400 | 3 | 10.35 | 18867 |
| DOL 8.16 | DOOR LIGHT | 800 × 1600 | 4 | 11.78 | 18877 |
| DOL 8.18 | DOOR LIGHT | 800 × 1800 | 4 | 13.22 | 18887 |
| DOL 8.20 | DOOR LIGHT | 800 × 2000 | 4 | 14.65 | 18897 |

* Use door cable holder as door stiffener for 800 wide.

| TYPE | DESCRIPTION | WEIGHT (kg) | VERSION 3 ORDER NO. |
|---|---|---|---|
| GBFD | GUIDE BRACKET FOR DOOR | 0.038 | 11109 |

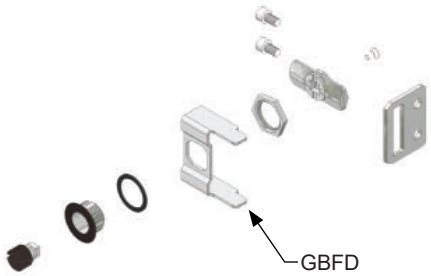


**ORDER INFORMATION**

| ORDER No. | DESCRIPTION |
|---|---|
| xxxxx-02 | Door with Plastic Lock - Steel Cam |
| xxxxx-03 | Door with Knob Lock - Plastic |
| xxxxx-04 | Door with Knob Lock - Steel Black |
| xxxxx-05 | Door with Knob Lock - Stainless Steel |
| xxxxx-06 | Door with Guide Brackets |
| xxxxx-07 | Door with Plastic Lock |

## DOOR LIGHT WITH SWING HANDLE

## DØR MED SVING HÅNDTAG

| TYPE | DESCRIPTION | SIZE (W×H) | WEIGHT (kg) | VERSION 3 ORDER No. RAL 7035 FTF. |
|---|---|---|---|---|
| DLSH 3.10 | DOOR LIGHT WITH SWING HANDLE | 300 × 1000 | 4.03 | 81727 |
| DLSH 3.12 | DOOR LIGHT WITH SWING HANDLE | 300 × 1200 | 4.50 | 81737 |
| DLSH 3.14 | DOOR LIGHT WITH SWING HANDLE | 300 × 1400 | 4.97 | 81747 |
| DLSH 3.16 | DOOR LIGHT WITH SWING HANDLE | 300 × 1600 | 5.44 | 81757 |
| DLSH 3.18 | DOOR LIGHT WITH SWING HANDLE | 300 × 1800 | 5.91 | 81767 |
| DLSH 3.20 | DOOR LIGHT WITH SWING HANDLE | 300 × 2000 | 6.39 | 81777 |
| DLSH 4.10 | DOOR LIGHT WITH SWING HANDLE | 400 × 1000 | 4.82 | 81507 |
| DLSH 4.12 | DOOR LIGHT WITH SWING HANDLE | 400 × 1200 | 5.71 | 81517 |
| DLSH 4.14 | DOOR LIGHT WITH SWING HANDLE | 400 × 1400 | 6.81 | 81527 |
| DLSH 4.16 | DOOR LIGHT WITH SWING HANDLE | 400 × 1600 | 7.90 | 81537 |
| DLSH 4.18 | DOOR LIGHT WITH SWING HANDLE | 400 × 1800 | 7.96 | 81547 |
| DLSH 4.20 | DOOR LIGHT WITH SWING HANDLE | 400 × 2000 | 10.09 | 81557 |
| DLSH 5.10 | DOOR LIGHT WITH SWING HANDLE | 500 × 1000 | 5.60 | 81787 |
| DLSH 5.12 | DOOR LIGHT WITH SWING HANDLE | 500 × 1200 | 6.39 | 81797 |
| DLSH 5.14 | DOOR LIGHT WITH SWING HANDLE | 500 × 1400 | 7.16 | 81807 |
| DLSH 5.16 | DOOR LIGHT WITH SWING HANDLE | 500 × 1600 | 7.96 | 81817 |
| DLSH 5.18 | DOOR LIGHT WITH SWING HANDLE | 500 × 1800 | 8.74 | 81827 |
| DLSH 5.20 | DOOR LIGHT WITH SWING HANDLE | 500 × 2000 | 9.53 | 81837 |
| DLSH 6.10 | DOOR LIGHT WITH SWING HANDLE | 600 × 1000 | 5.71 | 81587 |
| DLSH 6.12 | DOOR LIGHT WITH SWING HANDLE | 600 × 1200 | 6.81 | 81597 |
| DLSH 6.14 | DOOR LIGHT WITH SWING HANDLE | 600 × 1400 | 7.90 | 81607 |
| DLSH 6.16 | DOOR LIGHT WITH SWING HANDLE | 600 × 1600 | 7.96 | 81617 |
| DLSH 6.18 | DOOR LIGHT WITH SWING HANDLE | 600 × 1800 | 10.09 | 81627 |
| DLSH 6.20 | DOOR LIGHT WITH SWING HANDLE | 600 × 2000 | 11.18 | 81637 |

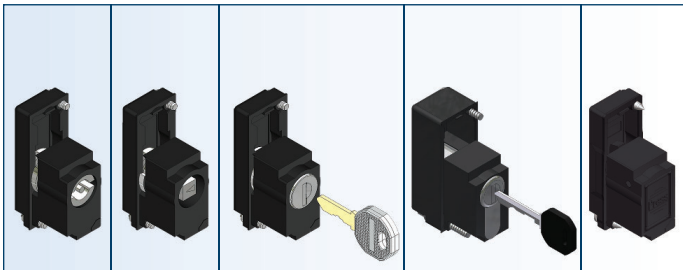

DOB 3 | SQ 8 | KLSH | KLSHL | PLSH

## LOCK INSERTS (FOR SWING HANDLE)

## LÅSE (TIL SVING HÅNDTAG)

| TYPE | DESCRIPTION | WEIGHT (kg) | ORDER No. Non locking | ORDER No. Keyed alike | ORDER No. Keyed different |
|---|---|---|---|---|---|
| DOB 3 | DOUBLE BIT 3 LOCK INSERT | 0.06 | 12100 | - | - |
| SQ 8 | SQUARE LOCK INSERT 8 mm | 0.05 | 12105 | - | - |
| KLSH | KEY LOCK INSERT | 0.07 | - | 12111 | 12112 |
| KLSHC | KEY LOCK INSERT CL-001 | 0.11 | - | 12134 | - |
| PLSH | PUSH LOCK INSERT | 0.08 | 12117 | - | - |

Other insert options are available on request

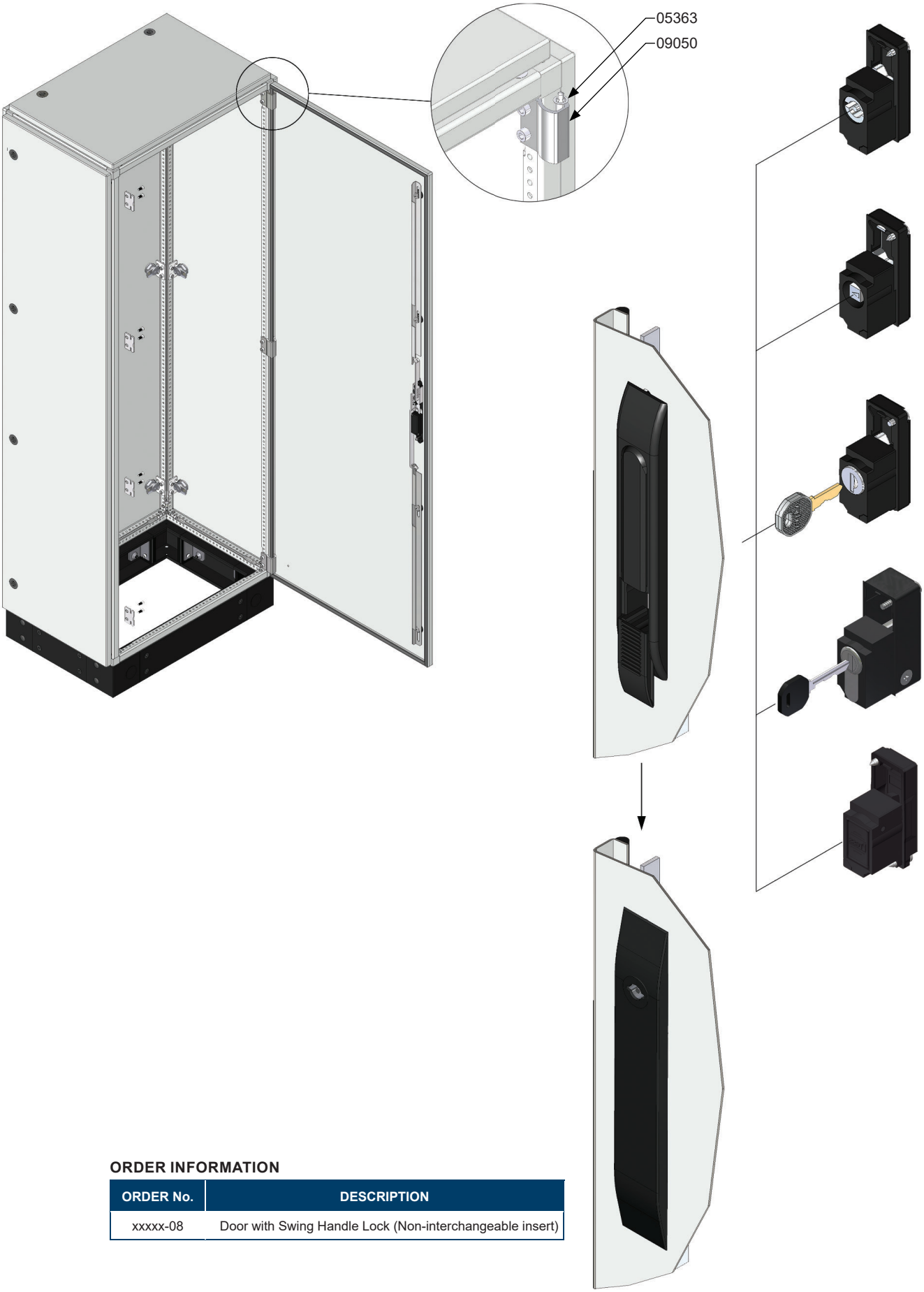


**ORDER INFORMATION**

| ORDER No. | DESCRIPTION |
|---|---|
| xxxxx-08 | Door with Swing Handle Lock (Non-interchangeable insert) |

## DOOR LIGHT WITH NORWEGIAN LOCK

## DØR MED SVING HÅNDTAG NORSK LÅS

| TYPE | DESCRIPTION | SIZE (W×H) | WEIGHT (kg) | VERSION 3 ORDER No. RAL 7035 FTF. |
|---|---|---|---|---|
| DWNL 3.10 | DOOR LIGHT WITH NORWEGIAN LOCK | 300 × 1000 | 4.03 | 82007 |
| DWNL 3.12 | DOOR LIGHT WITH NORWEGIAN LOCK | 300 × 1200 | 4.50 | 82017 |
| DWNL 3.14 | DOOR LIGHT WITH NORWEGIAN LOCK | 300 × 1400 | 4.97 | 82027 |
| DWNL 3.16 | DOOR LIGHT WITH NORWEGIAN LOCK | 300 × 1600 | 5.44 | 82037 |
| DWNL 3.18 | DOOR LIGHT WITH NORWEGIAN LOCK | 300 × 1800 | 5.91 | 82047 |
| DWNL 3.20 | DOOR LIGHT WITH NORWEGIAN LOCK | 300 × 2000 | 6.39 | 82057 |
| DWNL 4.10 | DOOR LIGHT WITH NORWEGIAN LOCK | 400 × 1000 | 4.82 | 82067 |
| DWNL 4.12 | DOOR LIGHT WITH NORWEGIAN LOCK | 400 × 1200 | 5.71 | 82077 |
| DWNL 4.14 | DOOR LIGHT WITH NORWEGIAN LOCK | 400 × 1400 | 6.81 | 82087 |
| DWNL 4.16 | DOOR LIGHT WITH NORWEGIAN LOCK | 400 × 1600 | 7.90 | 82097 |
| DWNL 4.18 | DOOR LIGHT WITH NORWEGIAN LOCK | 400 × 1800 | 7.96 | 82107 |
| DWNL 4.20 | DOOR LIGHT WITH NORWEGIAN LOCK | 400 × 2000 | 10.09 | 82117 |
| DWNL 5.10 | DOOR LIGHT WITH NORWEGIAN LOCK | 500 × 1000 | 5.60 | 82127 |
| DWNL 5.12 | DOOR LIGHT WITH NORWEGIAN LOCK | 500 × 1200 | 6.39 | 82137 |
| DWNL 5.14 | DOOR LIGHT WITH NORWEGIAN LOCK | 500 × 1400 | 7.17 | 82147 |
| DWNL 5.16 | DOOR LIGHT WITH NORWEGIAN LOCK | 500 × 1600 | 7.96 | 82157 |
| DWNL 5.18 | DOOR LIGHT WITH NORWEGIAN LOCK | 500 × 1800 | 8.74 | 82167 |
| DWNL 5.20 | DOOR LIGHT WITH NORWEGIAN LOCK | 500 × 2000 | 9.53 | 82177 |
| DWNL 6.10 | DOOR LIGHT WITH NORWEGIAN LOCK | 600 × 1000 | 5.71 | 82187 |
| DWNL 6.12 | DOOR LIGHT WITH NORWEGIAN LOCK | 600 × 1200 | 6.81 | 82197 |
| DWNL 6.14 | DOOR LIGHT WITH NORWEGIAN LOCK | 600 × 1400 | 7.90 | 82207 |
| DWNL 6.16 | DOOR LIGHT WITH NORWEGIAN LOCK | 600 × 1600 | 7.96 | 82217 |
| DWNL 6.18 | DOOR LIGHT WITH NORWEGIAN LOCK | 600 × 1800 | 10.09 | 82227 |
| DWNL 6.20 | DOOR LIGHT WITH NORWEGIAN LOCK | 600 × 2000 | 11.18 | 82237 |

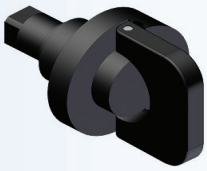

×50 Nos.

## KNOB LOCK

## FINGER LÅS

| TYPE | DESCRIPTION | WEIGHT (kg) | VERSION 3 ORDER No. Polyamide black |
|---|---|---|---|
| KL | KNOB LOCK - Plastic | 0.005 | 12106 |

* Knob Lock - Plastic (KL) is not compatible with Steel Lock.

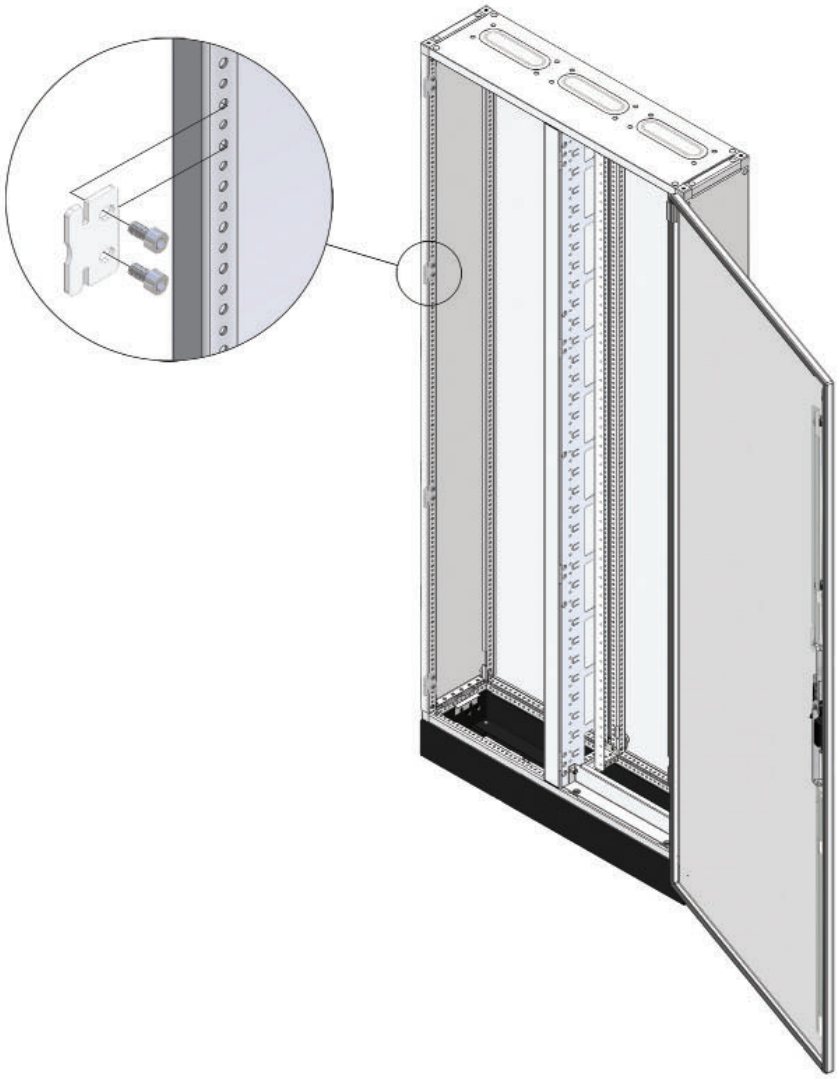

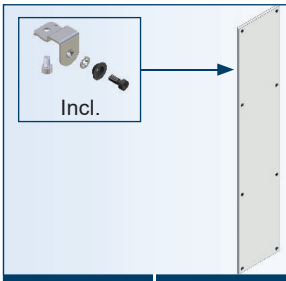


## COVER LIGHT

## AFDÆKNING LIGHT

| TYPE | DESCRIPTION | SIZE (W×H) | WEIGHT (kg) | VERSION 3 ORDER No. RAL 7035 FTF. |
|---|---|---|---|---|
| COVL 2.2 | COVER LIGHT | 200 × 200 | 0.51 | 19607 |
| COVL 2.4 | COVER LIGHT | 200 × 400 | 0.92 | 19617 |
| COVL 2.6 | COVER LIGHT | 200 × 600 | 1.33 | 19627 |
| COVL 2.8 | COVER LIGHT | 200 × 800 | 1.75 | 19637 |
| COVL 2.10 | COVER LIGHT | 200 × 1000 | 2.16 | 19647 |
| COVL 2.12 | COVER LIGHT | 200 × 1200 | 2.58 | 19657 |
| COVL 2.14 | COVER LIGHT | 200 × 1400 | 2.99 | 19667 |
| COVL 2.16 | COVER LIGHT | 200 × 1600 | 3.41 | 19677 |
| COVL 2.18 | COVER LIGHT | 200 × 1800 | 3.82 | 19687 |
| COVL 2.20 | COVER LIGHT | 200 × 2000 | 4.24 | 19697 |
| COVL 3.2 | COVER LIGHT | 300 × 200 | 0.76 | 19707 |
| COVL 3.4 | COVER LIGHT | 300 × 400 | 1.07 | 19717 |
| COVL 3.6 | COVER LIGHT | 300 × 600 | 1.50 | 19727 |
| COVL 3.8 | COVER LIGHT | 300 × 800 | 1.92 | 19737 |
| COVL 3.10 | COVER LIGHT | 300 × 1000 | 2.40 | 19747 |
| COVL 3.12 | COVER LIGHT | 300 × 1200 | 2.76 | 19757 |
| COVL 3.14 | COVER LIGHT | 300 × 1400 | 3.17 | 19767 |
| COVL 3.16 | COVER LIGHT | 300 × 1600 | 3.66 | 19777 |
| COVL 3.18 | COVER LIGHT | 300 × 1800 | 4.01 | 19787 |
| COVL 3.20 | COVER LIGHT | 300 × 2000 | 4.60 | 19797 |
| COVL 4.4 | COVER LIGHT | 400 × 400 | 1.67 | 19807 |
| COVL 4.6 | COVER LIGHT | 400 × 600 | 2.43 | 19817 |
| COVL 4.8 | COVER LIGHT | 400 × 800 | 3.18 | 19827 |
| COVL 4.10 | COVER LIGHT | 400 × 1000 | 3.94 | 19837 |
| COVL 4.12 | COVER LIGHT | 400 × 1200 | 4.69 | 19847 |
| COVL 4.14 | COVER LIGHT | 400 × 1400 | 5.45 | 19857 |
| COVL 4.16 | COVER LIGHT | 400 × 1600 | 6.20 | 19867 |
| COVL 4.18 | COVER LIGHT | 400 × 1800 | 6.96 | 19877 |
| COVL 4.20 | COVER LIGHT | 400 × 2000 | 7.71 | 19887 |
| COVL 5.2 | COVER LIGHT | 500 × 200 | 1.20 | 28907 |
| COVL 5.4 | COVER LIGHT | 500 × 400 | 1.99 | 28917 |
| COVL 5.6 | COVER LIGHT | 500 × 600 | 2.77 | 28927 |
| COVL 5.8 | COVER LIGHT | 500 × 800 | 3.56 | 28937 |
| COVL 5.10 | COVER LIGHT | 500 × 1000 | 4.34 | 28947 |
| COVL 5.12 | COVER LIGHT | 500 × 1200 | 5.13 | 28957 |
| COVL 5.14 | COVER LIGHT | 500 × 1400 | 5.91 | 28967 |
| COVL 5.16 | COVER LIGHT | 500 × 1600 | 6.70 | 28977 |
| COVL 5.18 | COVER LIGHT | 500 × 1800 | 7.48 | 28987 |
| COVL 5.20 | COVER LIGHT | 500 × 2000 | 8.27 | 28997 |
| COVL 6.6 | COVER LIGHT | 600 × 600 | 3.59 | 19897 |
| COVL 6.8 | COVER LIGHT | 600 × 800 | 4.62 | 19907 |
| COVL 6.10 | COVER LIGHT | 600 × 1000 | 5.71 | 19917 |
| COVL 6.12 | COVER LIGHT | 600 × 1200 | 6.81 | 19927 |
| COVL 6.14 | COVER LIGHT | 600 × 1400 | 7.90 | 19937 |
| COVL 6.16 | COVER LIGHT | 600 × 1600 | 8.99 | 19947 |
| COVL 6.18 | COVER LIGHT | 600 × 1800 | 10.09 | 19957 |
| COVL 6.20 | COVER LIGHT | 600 × 2000 | 11.18 | 19967 |
| COVL 8.14 | COVER LIGHT | 800 × 1400 | 10.5 | 73367 |
| COVL 8.16 | COVER LIGHT | 800 × 1600 | 12.4 | 73377 |
| COVL 8.18 | COVER LIGHT | 800 × 1800 | 13.92 | 73387 |
| COVL 8.20 | COVER LIGHT | 800 × 2000 | 15.46 | 73397 |

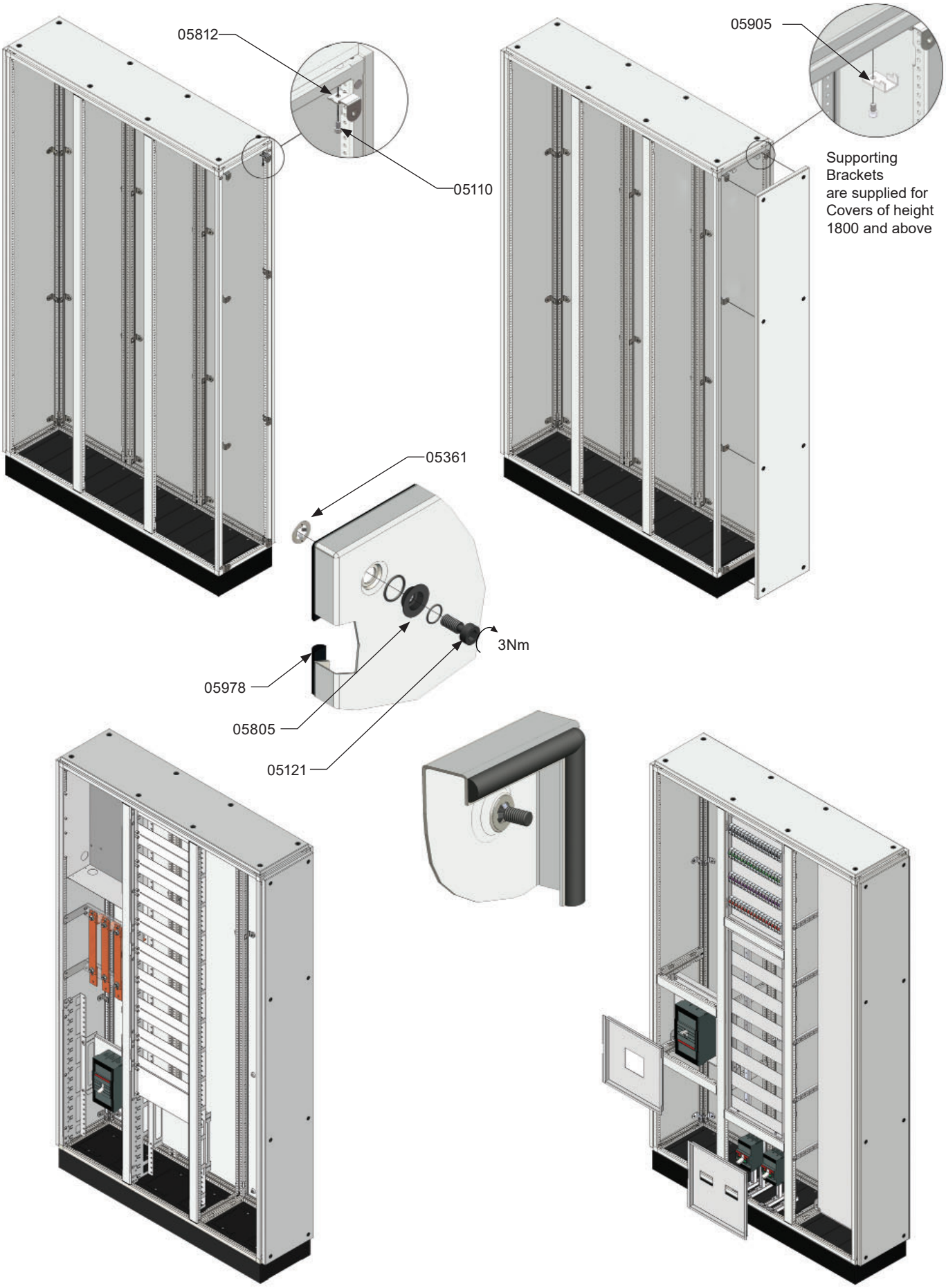


All TM inserts fit

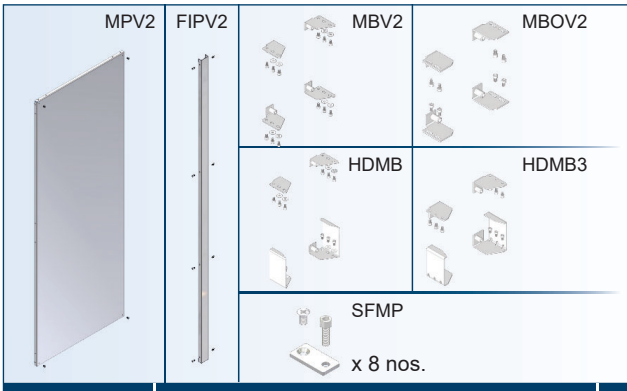


## MOUNTING PLATE

## MONTAGEPLADER

| TYPE | DESCRIPTION | SIZE (W×H) | WEIGHT (kg) | VERSION 2 ORDER No. 2 mm Alu-zinc | VERSION 2 ORDER No. 3 mm Alu-zinc |
|---|---|---|---|---|---|
| MPV2 2.2 | MOUNTING PLATE | 200 × 200 | 0.52 | 19430 | - |
| MPV2 2.4 | MOUNTING PLATE | 200 × 400 | 1.15 | 19431 | - |
| MPV2 2.6 | MOUNTING PLATE | 200 × 600 | 1.70 | 19432 | - |
| MPV2 2.8 | MOUNTING PLATE | 200 × 800 | 2.38 | 19433 | - |
| MPV2 2.10 | MOUNTING PLATE | 200 × 1000 | 4.61 | 19434 | - |
| MPV2 2.12 | MOUNTING PLATE | 200 × 1200 | 6.20 | 19435 | - |
| MPV2 2.14 | MOUNTING PLATE | 200 × 1400 | 7.35 | 19436 | - |
| MPV2 2.16 | MOUNTING PLATE | 200 × 1600 | 8.31 | 19437 | - |
| MPV2 2.18 | MOUNTING PLATE | 200 × 1800 | 9.71 | 19438 | - |
| MPV2 2.20 | MOUNTING PLATE | 200 × 2000 | 11.12 | 19439 | - |
| MPV2 4.3 | MOUNTING PLATE | 400 × 300 | 1.51 | 19461 | - |
| MPV2 4.4 | MOUNTING PLATE | 400 × 400 | 2.17 | 19462 | - |
| MPV2 4.6 | MOUNTING PLATE | 400 × 600 | 3.60 | 19463 | - |
| MPV2 4.8 | MOUNTING PLATE | 400 × 800 | 4.51 | 19464 | - |
| MPV2 4.10 | MOUNTING PLATE | 400 × 1000 | 6.02 | 19465 | - |
| MPV2 4.12 | MOUNTING PLATE | 400 × 1200 | 7.41 | 19466 | - |
| MPV2 4.14 | MOUNTING PLATE | 400 × 1400 | 8.65 | 19467 | - |
| MPV2 4.16 | MOUNTING PLATE | 400 × 1600 | 10.11 | 19468 | - |
| MPV2 4.18 | MOUNTING PLATE | 400 × 1800 | 11.31 | 19469 | - |
| MPV2 4.20 | MOUNTING PLATE | 400 × 2000 | 12.31 | 19470 | - |
| MPV2 6.6 | MOUNTING PLATE | 600 × 600 | 5.42 | 19471 | - |
| MPV2 6.8 | MOUNTING PLATE | 600 × 800 | 7.28 | 19472 | - |
| MPV2 6.10 | MOUNTING PLATE | 600 × 1000 | 9.31 | 19473 | - |
| MPV2 6.12 | MOUNTING PLATE | 600 × 1200 | 11.21 | 19474 | - |
| MPV2 6.14 | MOUNTING PLATE | 600 × 1400 | 13.21 | 19475 | - |
| MPV2 6.16 | MOUNTING PLATE | 600 × 1600 | 15.21 | 19476 | - |
| MPV2 6.18 | MOUNTING PLATE | 600 × 1800 | 17.23 | 19477 | - |
| MPV2 6.20 | MOUNTING PLATE | 600 × 2000 | 19.21 | 19478 | 19495 |
| MPV2 6.22 | MOUNTING PLATE | 600 × 2200 | 21.19 | 19486 | 19502 |
| MPV2 8.8 | MOUNTING PLATE | 800 × 800 | 10.02 | 19479 | - |
| MPV2 8.10 | MOUNTING PLATE | 800 × 1000 | 12.64 | 19480 | - |
| MPV2 8.12 | MOUNTING PLATE | 800 × 1200 | 15.27 | 19481 | - |
| MPV2 8.14 | MOUNTING PLATE | 800 × 1400 | 17.89 | 19482 | - |
| MPV2 8.16 | MOUNTING PLATE | 800 × 1600 | 20.51 | 19483 | - |
| MPV2 8.18 | MOUNTING PLATE | 800 × 1800 | 23.13 | 19484 | - |
| MPV2 8.20 | MOUNTING PLATE | 800 × 2000 | 25.75 | 19485 | 19496 |
| MPV2 8.22 | MOUNTING PLATE | 800 × 2200 | 28.37 | - | 19498 |
| MPV2 10.20 | MOUNTING PLATE | 1000 × 2000 | 46.96 | - | 19499 |
| MPV2 10.22 | MOUNTING PLATE | 1000 × 2200 | 51.66 | - | 19500 |
| MPV2 12.20 | MOUNTING PLATE | 1200 × 2000 | 56.36 | - | 19501 |
| MPV2 12.22 | MOUNTING PLATE | 1200 × 2200 | 62.00 | - | 19497 |

| TYPE | DESCRIPTION | WEIGHT (kg) | VERSION 2 ORDER No. |
|---|---|---|---|
| FIPV2 18 | FILLER PROFILE 1800 | 2.99 | 19515 |
| FIPV2 20 | FILLER PROFILE 2000 | 3.35 | 19516 |
| FIPV2 22 | FILLER PROFILE 2200 | 3.71 | 19517 |

| TYPE | DESCRIPTION | WEIGHT (kg) | VERSION 2 ORDER No. |
|---|---|---|---|
| MBV2 | MOUNTING BRACKETS | 0.46 | 19490 |
| MBOV2 | MOUNTING BRACKETS WITH OVAL HOLES | 0.40 | 19493 |
| HDMB | HEAVY DUTY MOUNTING BRACKETS | 0.82 | 19491 |
| HDMB3 | HEAVY DUTY MOUNTING BRACKETS FOR 3mm | 1.25 | 19492 |
| SFMP | SPACER FOR MOUNTING PLATE | 0.02 | 19494 |

**MBV2**

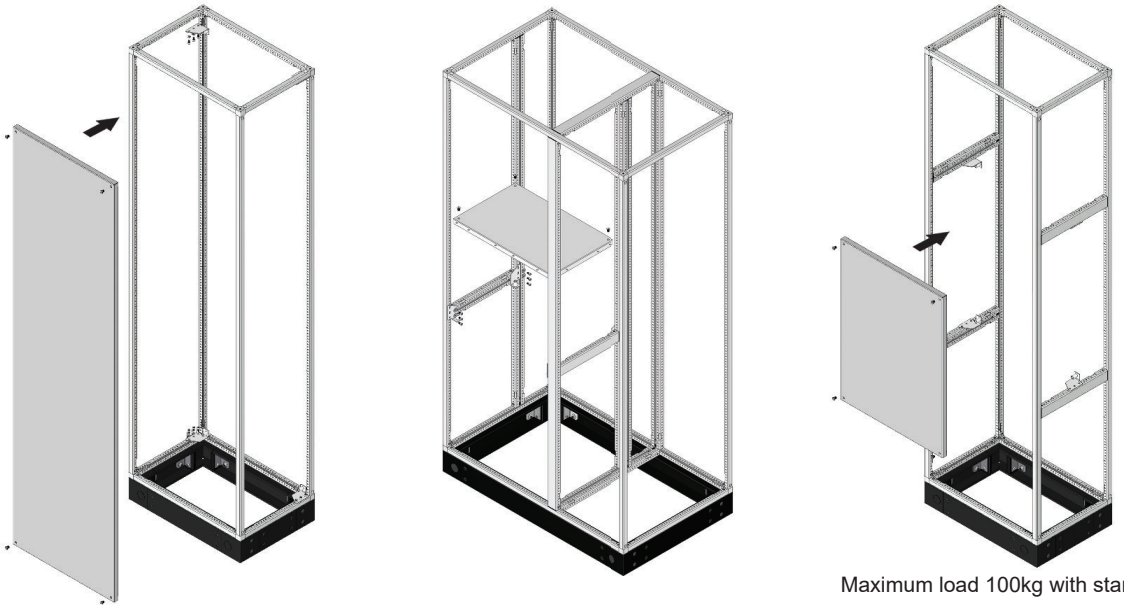

Maximum load 100kg with standard brackets.

**MBOV2**

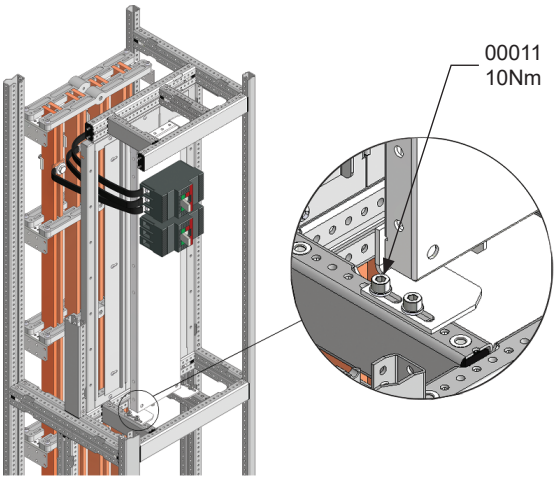


**SFMP**

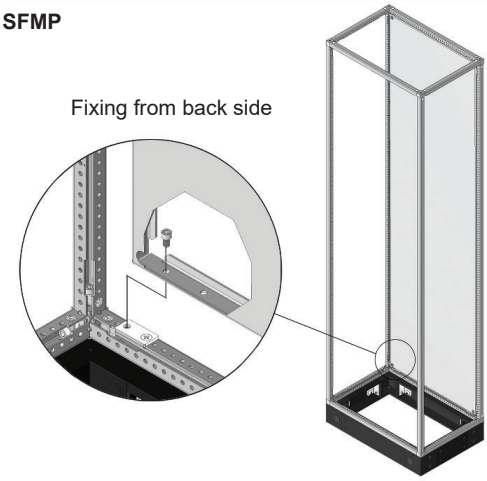


**HDMB**
**HDMB3** When using heavy duty brackets, the top must be mounted with standard brackets.

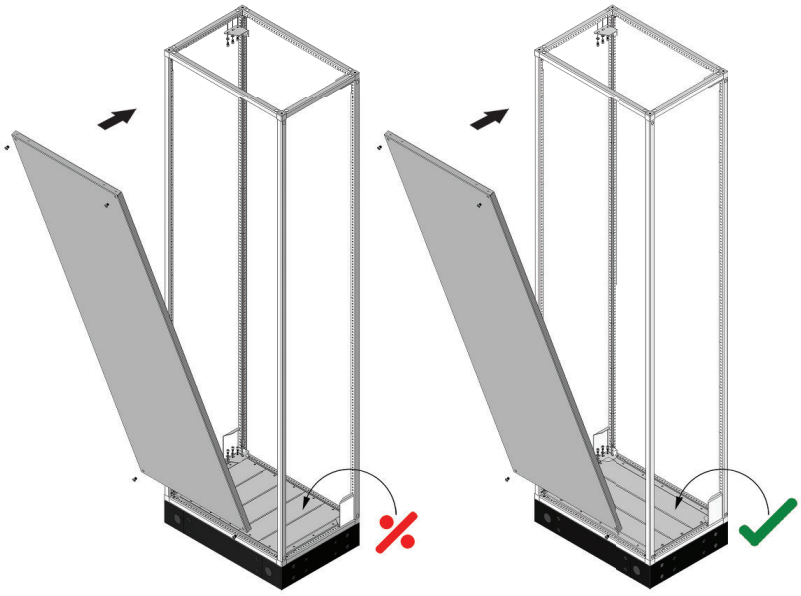

Maximum Load 250kg with heavy duty brackets.
Maximum Load 500kg with 3mm Mounting Plate & heavy duty brackets.

**FIPV2**

## CHASSIS PROFILES

## CHASSIS PROFIL

| TYPE | DESCRIPTION | MODULAR SIZE | WEIGHT (kg) | ORDER No. RAL 9010 SMF. | ORDER No. RAL 7035 FTF. |
|---|---|---|---|---|---|
| CPDB 2 | CHASSIS PROFILES | 200 | 0.3 | 65250 | 65274 |
| CPDB 4 | CHASSIS PROFILES | 400 | 1.1 | 65260 | 65191 |
| CPDB 6 | CHASSIS PROFILES | 600 | 2.3 | 65261 | 65192 |
| CPDB 8 | CHASSIS PROFILES | 800 | 2.5 | 65262 | 65193 |
| CPDB 10 | CHASSIS PROFILES | 1000 | 2.8 | 65263 | 65194 |
| CPDB 12 | CHASSIS PROFILES | 1200 | 3.1 | 65264 | 65195 |
| CPDB 14 | CHASSIS PROFILES | 1400 | 3.3 | 65270 | 65196 |
| CPDB 16 | CHASSIS PROFILES | 1600 | 4.2 | 65271 | 65197 |
| CPDB 18 | CHASSIS PROFILES | 1800 | 4.6 | 65272 | 65198 |
| CPDB 20 | CHASSIS PROFILES | 2000 | 5.1 | 65273 | 65199 |

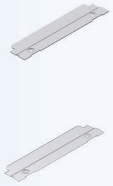

## FLAT TOP & BOTTOM PROFILES

## FLAD TOP OG BUND RAMME

| TYPE | DESCRIPTION | MODULAR SIZE (W) | WEIGHT (kg) | ORDER No. RAL 9010 SMF. | ORDER No. RAL 7035 FTF. |
|---|---|---|---|---|---|
| TBPDB 3 | FLAT TOP & BOTTOM PROFILES | 300 | 0.21 | 65265 | 65285 |
| TBPDB 4 | FLAT TOP & BOTTOM PROFILES | 400 | 0.30 | 65266 | 65286 |
| TBPDB 5 | FLAT TOP & BOTTOM PROFILES | 500 | 0.40 | 65267 | 65287 |
| TBPDB 6 | FLAT TOP & BOTTOM PROFILES | 600 | 0.51 | 65268 | 65288 |
| TBPDB 8 | FLAT TOP & BOTTOM PROFILES | 800 | 0.68 | 65269 | 65289 |

## 25 mm FILLING PROFILES

## 25 mm FYLDER PROFIL

| TYPE | DESCRIPTION | MODULAR SIZE (W) | WEIGHT (kg) | ORDER No. RAL 9010 SMF. | ORDER No. RAL 7035 FTF. |
|---|---|---|---|---|---|
| FLPDB 3 | 25 mm FILLING PROFILES | 300 | 0.22 | 65291 | 65475 |
| FLPDB 4 | 25 mm FILLING PROFILES | 400 | 0.30 | 65292 | 65476 |
| FLPDB 5 | 25 mm FILLING PROFILES | 500 | 0.37 | 65293 | 65477 |
| FLPDB 6 | 25 mm FILLING PROFILES | 600 | 0.45 | 65294 | 65478 |
| FLPDB 8 | 25 mm FILLING PROFILES | 800 | 0.37 | 65295 | 65479 |

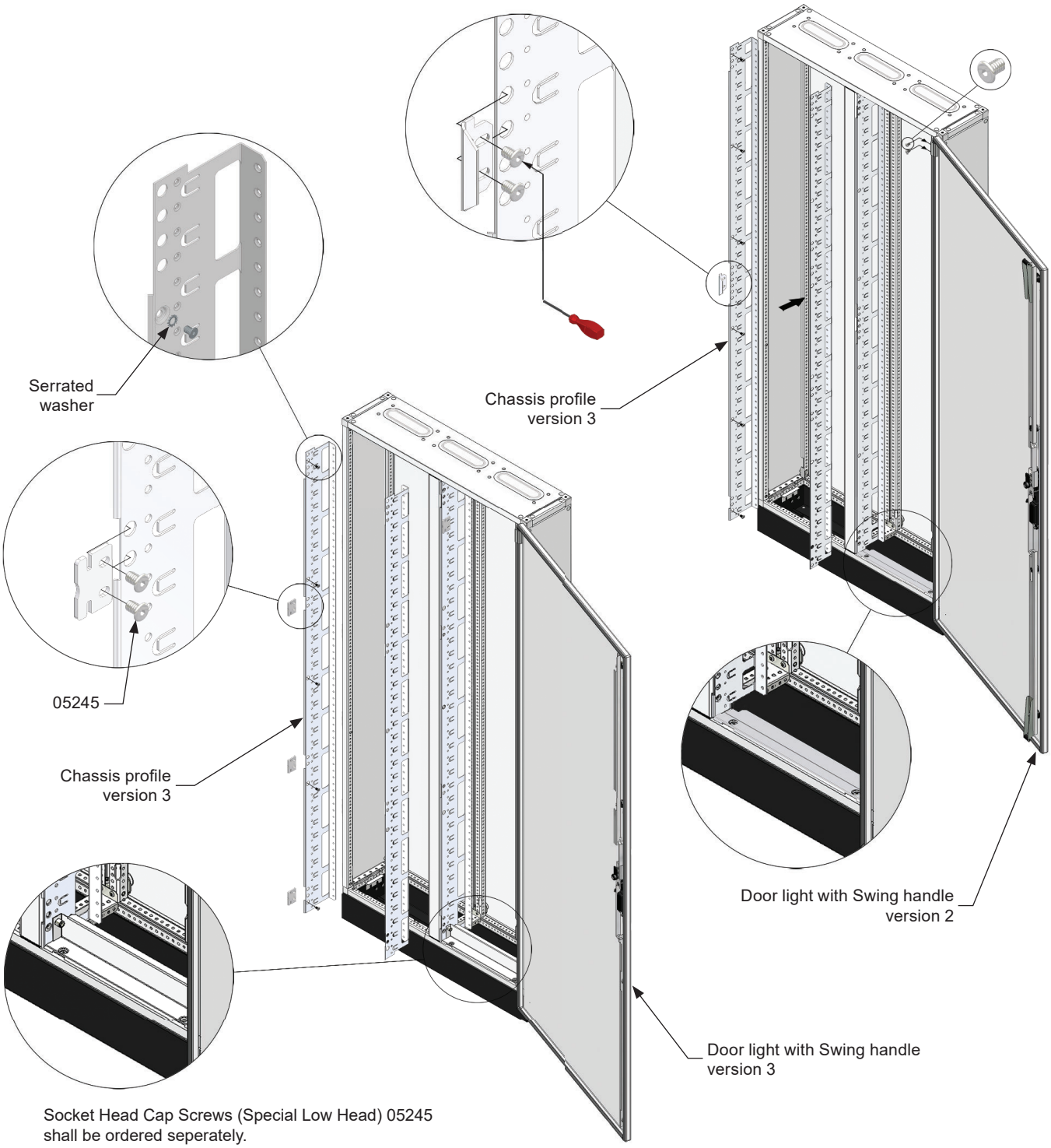


Socket Head Cap Screws (Special Low Head) 05245 shall be ordered seperately.

| DIN INSERTS | | | | | | | | | | | | | | | | |
|---|---|---|---|---|---|---|---|---|---|---|---|---|---|---|---|---|
| TYPE | 300×150 | | 400×150 | | 500×150 | | 600×150 | | 300×200 | | 400×200 | | 500×200 | | 600×200 | |
| | ROWS | MODULES | ROWS | MODULES | ROWS | MODULES | ROWS | MODULES | ROWS | MODULES | ROWS | MODULES | ROWS | MODULES | ROWS | MODULES |
| CPDB 2 | 1 | 12 | 1 | 18 | 1 | 23 | 1 | 29 | - | - | - | - | - | - | - | - |
| CPDB 4 | 2 | 24 | 2 | 36 | 2 | 46 | 2 | 58 | 1 | 12 | 1 | 18 | 1 | 23 | 1 | 29 |
| CPDB 6 | 3 | 36 | 3 | 54 | 3 | 69 | 3 | 87 | 2 | 24 | 2 | 36 | 2 | 46 | 2 | 58 |
| CPDB 8 | 5 | 60 | 5 | 90 | 5 | 115 | 5 | 145 | 3 | 36 | 3 | 54 | 3 | 69 | 3 | 87 |
| CPDB 10 | 6 | 72 | 6 | 108 | 6 | 138 | 6 | 174 | 4 | 48 | 4 | 72 | 4 | 92 | 4 | 116 |
| CPDB 12 | 7 | 84 | 7 | 126 | 7 | 161 | 7 | 203 | 5 | 60 | 5 | 90 | 5 | 115 | 5 | 145 |
| CPDB 14 | 9 | 108 | 9 | 162 | 9 | 207 | 9 | 261 | 6 | 72 | 6 | 108 | 6 | 138 | 6 | 174 |
| CPDB 16 | 10 | 120 | 10 | 180 | 10 | 230 | 10 | 290 | 7 | 84 | 7 | 126 | 7 | 161 | 7 | 203 |
| CPDB 18 | 11 | 132 | 11 | 198 | 11 | 253 | 11 | 319 | 8 | 96 | 8 | 144 | 8 | 184 | 8 | 232 |
| CPDB 20 | 13 | 156 | 13 | 234 | 13 | 299 | 13 | 377 | 9 | 108 | 9 | 162 | 9 | 207 | 9 | 261 |

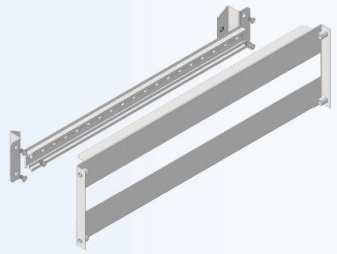

## STEEL DIN RAIL INSERT
## (FOR SMISSLINE TP BY ABB)

## STÅL DIN INDSATS
## (TIL SMISSLINE TP BY ABB)

| TYPE | DESCRIPTION | ROWS × MODULES | SIZE (W×H) | WEIGHT (kg) | ORDER No. RAL 9010 SMF. | ORDER No. RAL 7035 FTF. |
|---|---|---|---|---|---|---|
| *SMDI 3.1-5 | STEEL DIN RAIL INSERT | 1 × 8 | 300 × 150 | 0.49 | 66549 | 66525 |
| *SMDI 3.2 | STEEL DIN RAIL INSERT | 1 × 8 | 300 × 200 | 0.59 | 66550 | 66526 |
| *SMDI 3.3 | STEEL DIN RAIL INSERT | 2 × 8 | 300 × 300 | 0.79 | 66551 | 66527 |
| *SMDI 3.4-5 | STEEL DIN RAIL INSERT | 3 × 8 | 300 × 450 | 1.09 | 66552 | 66528 |
| SMDI 4.1-5 | STEEL DIN RAIL INSERT | 1 × 12 | 400 × 150 | 0.63 | 66553 | 66529 |
| SMDI 4.2 | STEEL DIN RAIL INSERT | 1 × 12 | 400 × 200 | 0.78 | 66554 | 66530 |
| SMDI 4.3 | STEEL DIN RAIL INSERT | 2 × 12 | 400 × 300 | 1.04 | 66555 | 66531 |
| SMDI 4.4-5 | STEEL DIN RAIL INSERT | 3 × 12 | 400 × 450 | 1.45 | 66556 | 66532 |
| *SMDI 5.1-5 | STEEL DIN RAIL INSERT | 1 × 18 | 500 × 150 | 0.77 | 66557 | 66533 |
| *SMDI 5.2 | STEEL DIN RAIL INSERT | 1 × 18 | 500 × 200 | 0.96 | 66558 | 66534 |
| *SMDI 5.3 | STEEL DIN RAIL INSERT | 2 × 18 | 500 × 300 | 1.29 | 66559 | 66535 |
| *SMDI 5.4-5 | STEEL DIN RAIL INSERT | 3 × 18 | 500 × 450 | 1.81 | 66560 | 66536 |
| SMDI 6.1-5 | STEEL DIN RAIL INSERT | 1 × 24 | 600 × 150 | 0.91 | 66561 | 66537 |
| SMDI 6.2 | STEEL DIN RAIL INSERT | 1 × 24 | 600 × 200 | 1.14 | 66562 | 66538 |
| SMDI 6.3 | STEEL DIN RAIL INSERT | 2 × 24 | 600 × 300 | 1.54 | 66563 | 66539 |
| SMDI 6.4-5 | STEEL DIN RAIL INSERT | 3 × 24 | 600 × 450 | 2.17 | 66564 | 66540 |
| SMDI 8.1-5 | STEEL DIN RAIL INSERT | 1 × 34 | 800 × 150 | 1.19 | 66565 | 66541 |
| SMDI 8.2 | STEEL DIN RAIL INSERT | 1 × 34 | 800 × 200 | 1.50 | 66566 | 66542 |
| SMDI 8.3 | STEEL DIN RAIL INSERT | 2 × 34 | 800 × 300 | 2.04 | 66567 | 66543 |
| SMDI 8.4-5 | STEEL DIN RAIL INSERT | 3 × 34 | 800 × 450 | 2.90 | 66568 | 66544 |
| SMDI 10.1-5 | STEEL DIN RAIL INSERT | 1 × 46 | 1000 × 150 | 1.48 | 66569 | 66545 |
| SMDI 10.2 | STEEL DIN RAIL INSERT | 1 × 46 | 1000 × 200 | 1.86 | 66570 | 66546 |
| SMDI 10.3 | STEEL DIN RAIL INSERT | 2 × 46 | 1000 × 300 | 2.55 | 66571 | 66547 |
| SMDI 10.4-5 | STEEL DIN RAIL INSERT | 3 × 46 | 1000 × 450 | 3.62 | 66572 | 66548 |

* Horizontal mounting only.

## FILLING PROFILES
## (FOR SMISSLINE TP BY ABB)

## FYLDER PROFIL
## (TIL SMISSLINE TP BY ABB)

| TYPE | DESCRIPTION | SIZE (W) | WEIGHT (kg) | ORDER No. RAL 9010 SMF. | ORDER No. RAL 7035 FTF. |
|---|---|---|---|---|---|
| SMFP 4 | FILLING PROFILE VERTICAL | 400 | 0.30 | 66577 | 66573 |
| SMFP 6 | FILLING PROFILE VERTICAL | 600 | 0.51 | 66578 | 66574 |
| SMFP 8 | FILLING PROFILE VERTICAL | 800 | 0.68 | 66579 | 66575 |
| SMFP 10 | FILLING PROFILE VERTICAL | 1000 | 0.79 | 66580 | 66576 |

## HORIZONTAL ARRANGEMENT

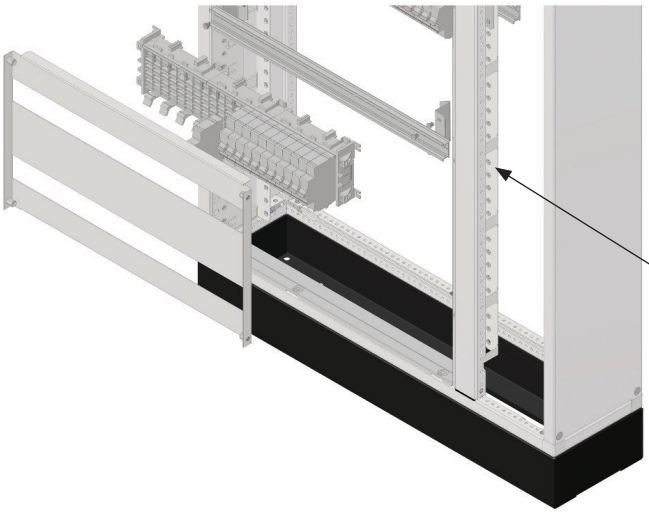


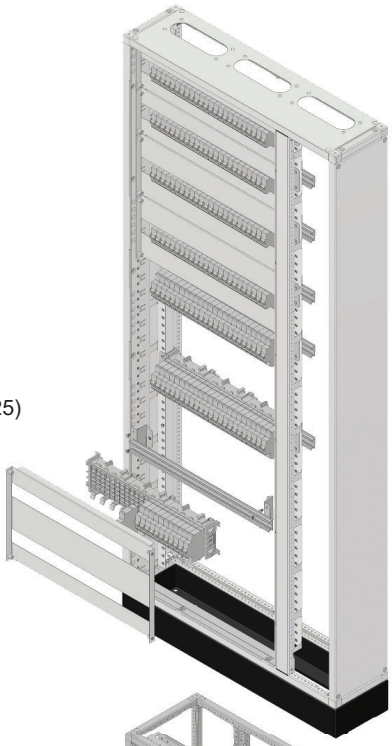

## VERTICAL ARRANGEMENT

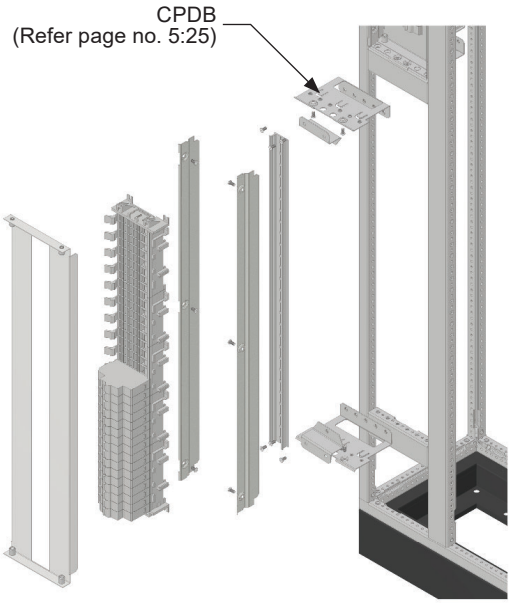


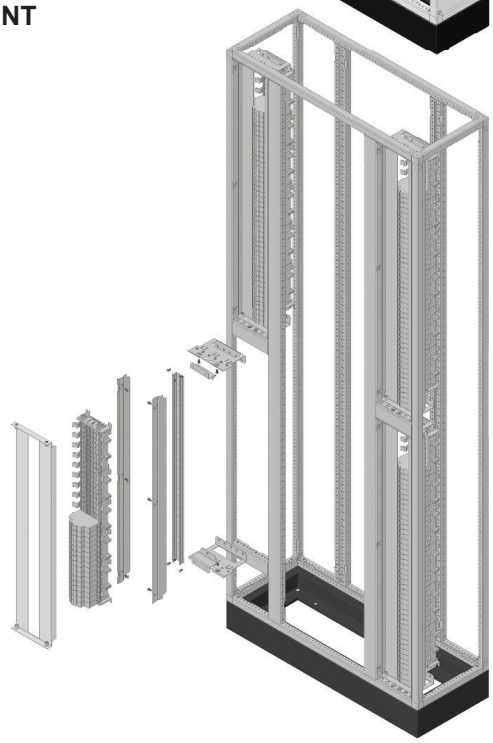

| TYPE | SIZE (W) | MODULES PER ROW | 6-MODULE SOCKET PER ROW | 8-MODULE SOCKET PER ROW | BUSBAR LENGTH |
|---|---|---|---|---|---|
| SMDI 3.X | 300 | 8 | 0 | 1 | 140 |
| SMDI 4.X | 400 | 12 | 2 | 0 | 212 |
| SMDI 5.X | 500 | 18 | 3 | 0 | 320 |
| SMDI 6.X | 600 | 24 | 0 | 3 | 428 |
| SMDI 8.X | 800 | 34 | 3 | 2 | 608 |
| SMDI 10.X | 1000 | 46 | 1 | 5 | 824 |

Note : 'X' is Height.

DIDB 4.15

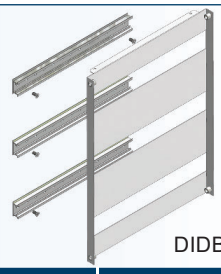

DIDB 4.45

## STEEL DIN RAIL INSERT (FOR CHASSIS PROFILE)

## STÅL DIN INDSATS (TIL CHASSIS PROFIL)

| TYPE | DESCRIPTION | ROWS+MODULES | SIZE (W×H) | WEIGHT (kg) | ORDER No. RAL 9010 SMF. | ORDER No. RAL 7035 FTF. |
|---|---|---|---|---|---|---|
| DIDB 3.1-5 | STEEL DIN RAIL INSERT | 1 × 12 | 300 × 150 | 0.40 | 65305 | 65306 |
| DIDB 3.2 | STEEL DIN RAIL INSERT | 1 × 12 | 300 × 200 | 0.52 | 65315 | 65316 |
| DIDB 3.3 | STEEL DIN RAIL INSERT | 2 × 12 | 300 × 300 | 0.78 | 65375 | 65376 |
| DIDB 3.4-5 | STEEL DIN RAIL INSERT | 3 × 12 | 300 × 450 | 1.20 | 65450 | 65451 |
| DIDB 4.1-5 | STEEL DIN RAIL INSERT | 1 × 18 | 400 × 150 | 0.51 | 65300 | 65301 |
| DIDB 4.2 | STEEL DIN RAIL INSERT | 1 × 18 | 400 × 200 | 0.75 | 65310 | 65311 |
| DIDB 4.3 | STEEL DIN RAIL INSERT | 2 × 18 | 400 × 300 | 1.04 | 65380 | 65381 |
| DIDB 4.4-5 | STEEL DIN RAIL INSERT | 3 × 18 | 400 × 450 | 1.53 | 65455 | 65456 |
| DIDB 5.1-5 | STEEL DIN RAIL INSERT | 1 × 23 | 500 × 150 | 0.67 | 65325 | 65326 |
| DIDB 5.2 | STEEL DIN RAIL INSERT | 1 × 23 | 500 × 200 | 0.86 | 65335 | 65336 |
| DIDB 5.3 | STEEL DIN RAIL INSERT | 2 × 23 | 500 × 300 | 1.30 | 65385 | 65386 |
| DIDB 5.4-5 | STEEL DIN RAIL INSERT | 3 × 12 | 500 × 450 | 2.01 | 65460 | 65461 |
| DIDB 6.1-5 | STEEL DIN RAIL INSERT | 1 × 29 | 600 × 150 | 0.83 | 65320 | 65321 |
| DIDB 6.2 | STEEL DIN RAIL INSERT | 1 × 29 | 600 × 200 | 1.04 | 65330 | 65331 |
| DIDB 6.3 | STEEL DIN RAIL INSERT | 2 × 29 | 600 × 300 | 1.56 | 65390 | 65391 |
| DIDB 6.4-5 | STEEL DIN RAIL INSERT | 3 × 29 | 600 × 450 | 2.49 | 65465 | 65466 |
| DIDB 8.1-5 | STEEL DIN RAIL INSERT | 1 × 40 | 800 × 150 | 0.99 | 65340 | 65341 |
| DIDB 8.2 | STEEL DIN RAIL INSERT | 1 × 40 | 800 × 200 | 1.22 | 65345 | 65346 |
| DIDB 8.3 | STEEL DIN RAIL INSERT | 2 × 40 | 800 × 300 | 1.82 | 65395 | 65396 |
| DIDB 8.4-5 | STEEL DIN RAIL INSERT | 3 × 40 | 800 × 450 | 2.97 | 65397 | 65398 |

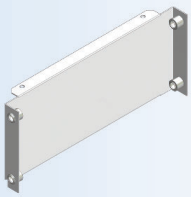

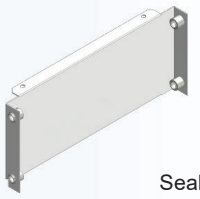

Seal type

## STEEL BLANK FRONT PLATE (FOR CHASSIS PROFILE)

## AFDÆKNING (TIL CHASSIS PROFIL)

| TYPE | DESCRIPTION | SIZE (W×H) | WEIGHT (kg) | ORDER No. RAL 9010 SMF. | ORDER No. SEAL TYPE RAL 9010 SMF. | ORDER No. RAL 7035 FTF. | ORDER No. SEAL TYPE RAL7035 FTF. |
|---|---|---|---|---|---|---|---|
| BFDB 3.5 | STEEL BLANK FRONT PLATE | 300 × 50 | 0.13 | 65543 | - | 65549 | - |
| BFDB 3.1 | STEEL BLANK FRONT PLATE | 300 × 100 | 0.26 | 65544 | - | 65551 | - |
| BFDB 3.1-5 | STEEL BLANK FRONT PLATE | 300 × 150 | 0.39 | 65545 | 65547 | 65553 | 65554 |
| BFDB 3.2 | STEEL BLANK FRONT PLATE | 300 × 200 | 0.52 | 65546 | 65548 | 65556 | 65558 |
| BFDB 3.3 | STEEL BLANK FRONT PLATE | 300 × 300 | 0.83 | 65550 | 65552 | 65559 | 65561 |
| BFDB 3.4-5 | STEEL BLANK FRONT PLATE | 300 × 450 | 1.17 | 65555 | 65557 | 65567 | 65568 |
| BFDB 3.6 | STEEL BLANK FRONT PLATE | 300 × 600 | 1.56 | 65560 | 65562 | 65569 | 65571 |
| BFDB 4.5 | STEEL BLANK FRONT PLATE | 400 × 50 | 0.19 | 65498 | - | 65508 | - |
| BFDB 4.1 | STEEL BLANK FRONT PLATE | 400 × 100 | 0.37 | 65499 | - | 65509 | - |
| BFDB 4.1-5 | STEEL BLANK FRONT PLATE | 400 × 150 | 0.56 | 65500 | 65502 | 65506 | 65511 |
| BFDB 4.2 | STEEL BLANK FRONT PLATE | 400 × 200 | 0.69 | 65501 | 65503 | 65513 | 65514 |
| BFDB 4.3 | STEEL BLANK FRONT PLATE | 400 × 300 | 1.02 | 65505 | 65507 | 65516 | 65522 |
| BFDB 4.4-5 | STEEL BLANK FRONT PLATE | 400 × 450 | 1.53 | 65510 | 65512 | 65523 | 65524 |
| BFDB 4.6 | STEEL BLANK FRONT PLATE | 400 × 600 | 2.05 | 65515 | 65517 | 65526 | 65527 |
| BFDB 5.5 | STEEL BLANK FRONT PLATE | 500 × 50 | 0.23 | 65563 | - | 65572 | - |
| BFDB 5.1 | STEEL BLANK FRONT PLATE | 500 × 100 | 0.46 | 65564 | - | 65573 | - |
| BFDB 5.1-5 | STEEL BLANK FRONT PLATE | 500 × 150 | 0.69 | 65565 | - | 65574 | - |
| BFDB 5.2 | STEEL BLANK FRONT PLATE | 500 × 200 | 0.86 | 65566 | - | 65576 | - |
| BFDB 5.3 | STEEL BLANK FRONT PLATE | 500 × 300 | 1.28 | 65570 | - | 65577 | - |
| BFDB 5.4-5 | STEEL BLANK FRONT PLATE | 500 × 450 | 2.08 | 65575 | - | 65578 | - |
| BFDB 5.6 | STEEL BLANK FRONT PLATE | 500 × 600 | 2.78 | 65580 | - | 65581 | - |
| BFDB 6.5 | STEEL BLANK FRONT PLATE | 600 × 50 | 0.25 | 65518 | - | 65528 | - |
| BFDB 6.1 | STEEL BLANK FRONT PLATE | 600 × 100 | 0.51 | 65519 | - | 65529 | - |
| BFDB 6.1-5 | STEEL BLANK FRONT PLATE | 600 × 150 | 0.76 | 65520 | - | 65531 | - |
| BFDB 6.2 | STEEL BLANK FRONT PLATE | 600 × 200 | 1.03 | 65521 | - | 65532 | - |
| BFDB 6.3 | STEEL BLANK FRONT PLATE | 600 × 300 | 1.56 | 65525 | - | 65533 | - |
| BFDB 6.4-5 | STEEL BLANK FRONT PLATE | 600 × 450 | 2.29 | 65530 | - | 65534 | - |
| BFDB 6.6 | STEEL BLANK FRONT PLATE | 600 × 600 | 3.06 | 65535 | - | 65536 | - |
| BFDB 8.5 | STEEL BLANK FRONT PLATE | 800 × 50 | 0.25 | 65640 | - | 65641 | - |
| BFDB 8.1 | STEEL BLANK FRONT PLATE | 800 × 100 | 0.51 | 65642 | - | 65643 | - |
| BFDB 8.1-5 | STEEL BLANK FRONT PLATE | 800 × 150 | 0.76 | 65644 | - | 65645 | - |
| BFDB 8.2 | STEEL BLANK FRONT PLATE | 800 × 200 | 1.03 | 65646 | - | 65647 | - |
| BFDB 8.3 | STEEL BLANK FRONT PLATE | 800 × 300 | 1.54 | 65584 | - | 65585 | - |
| BFDB 8.4-5 | STEEL BLANK FRONT PLATE | 800 × 450 | 2.29 | 65586 | - | 65587 | - |
| BFDB 8.6 | STEEL BLANK FRONT PLATE | 800 × 600 | 3.04 | 65588 | - | 65589 | - |

Tip!
**Mounting and wiring can be done on the work table.**

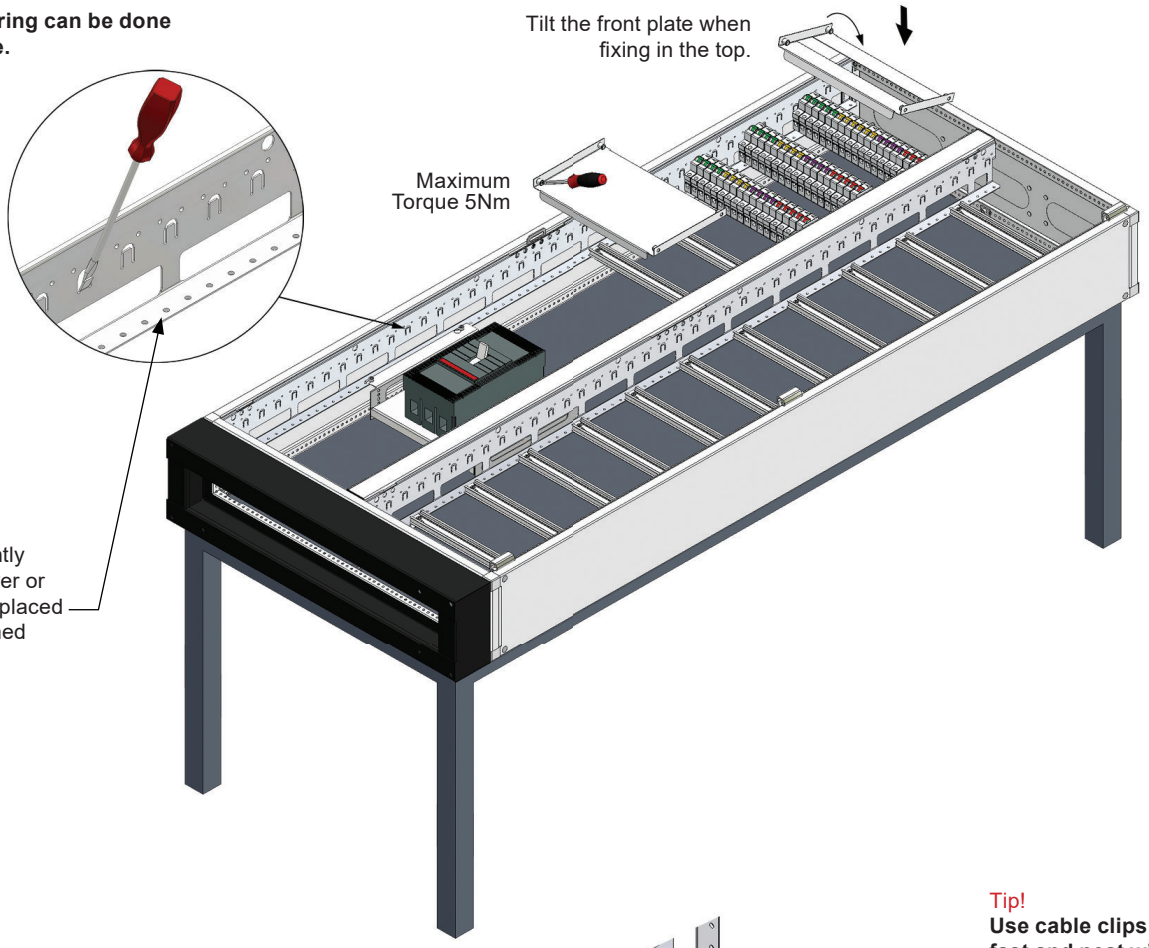


Tip!
**Use cable clips for fast and neat wiring.**

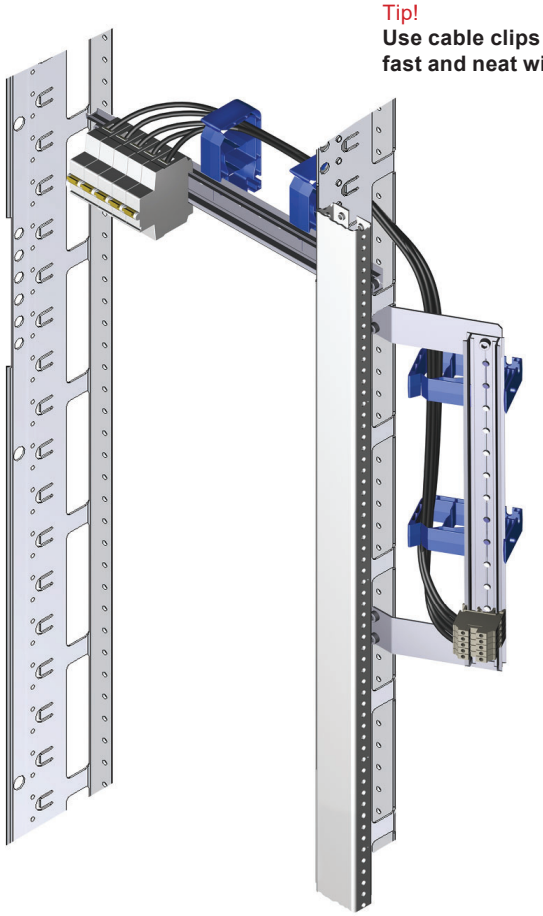

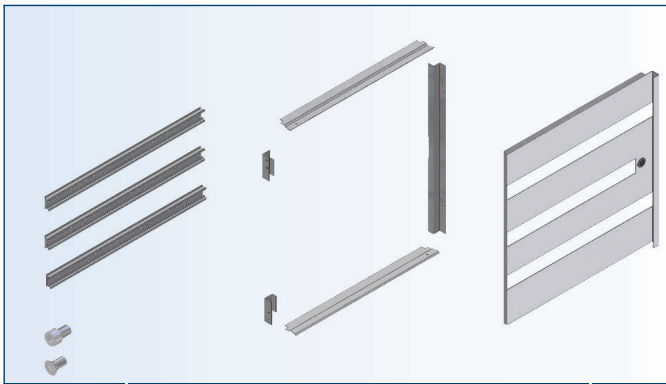

## STEEL DIN RAIL INSERT WITH ESCUTCHEON DOOR (FOR CHASSIS PROFILE)

## STÅL DIN INDSATS MED INVENDIG DØR (TIL CHASSIS PROFILE)

| TYPE | DESCRIPTION | ROWS+MODULES | SIZE (W×H) | WEIGHT (kg) | ORDER No. RAL 9010 SMF | ORDER No. RAL 7035 FTF |
|---|---|---|---|---|---|---|
| SDRCP 4.2 | STEEL DIN RAIL INSERT WITH ESCUTCHEON DOOR | 1 × 13 | 400 × 200 | 1.85 | 30600 | 30601 |
| SDRCP 4.4 | STEEL DIN RAIL INSERT WITH ESCUTCHEON DOOR | 2 × 13 | 400 × 400 | 3.30 | 30602 | 30603 |
| SDRCP 4.6 | STEEL DIN RAIL INSERT WITH ESCUTCHEON DOOR | 3 × 13 | 400 × 600 | 4.88 | 30604 | 30605 |
| SDRCP 4.8 | STEEL DIN RAIL INSERT WITH ESCUTCHEON DOOR | 5 × 13 | 400 × 800 | 5.45 | 30606 | 30607 |
| SDRCP 4.10 | STEEL DIN RAIL INSERT WITH ESCUTCHEON DOOR | 6 × 13 | 400 × 1000 | 7.35 | 30608 | 30609 |
| SDRCP 6.2 | STEEL DIN RAIL INSERT WITH ESCUTCHEON DOOR | 1 × 25 | 600 × 200 | 2.60 | 30620 | 30621 |
| SDRCP 6.4 | STEEL DIN RAIL INSERT WITH ESCUTCHEON DOOR | 2 × 25 | 600 × 400 | 4.58 | 30622 | 30623 |
| SDRCP 6.6 | STEEL DIN RAIL INSERT WITH ESCUTCHEON DOOR | 3 × 25 | 600 × 600 | 6.81 | 30624 | 30625 |
| SDRCP 6.8 | STEEL DIN RAIL INSERT WITH ESCUTCHEON DOOR | 5 × 25 | 600 × 800 | 9.72 | 30626 | 30627 |
| SDRCP 6.10 | STEEL DIN RAIL INSERT WITH ESCUTCHEON DOOR | 6 × 25 | 600 × 1000 | 10.87 | 30628 | 30629 |

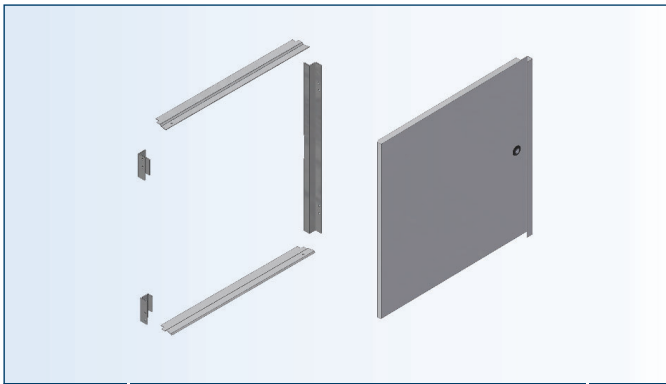

## ESCUTCHEON DOOR (FOR CHASSIS PROFILE)

## INVENDIG DØR (TIL CHASSIS PROFILE)

| TYPE | DESCRIPTION | ROWS+MODULES | SIZE (W×H) | WEIGHT (kg) | ORDER No. RAL 9010 SMF | ORDER No. RAL 7035 FTF |
|---|---|---|---|---|---|---|
| ESDCP 4.2 | ESCUTCHEON DOOR | 1 × 18 | 400 × 200 | 1.87 | 16410 | 16411 |
| ESDCP 4.4 | ESCUTCHEON DOOR | 2 × 18 | 400 × 400 | 3.24 | 16412 | 16413 |
| ESDCP 4.6 | ESCUTCHEON DOOR | 4 × 18 | 400 × 600 | 4.60 | 16414 | 16415 |
| ESDCP 4.8 | ESCUTCHEON DOOR | 6 × 18 | 400 × 800 | 5.97 | 16416 | 16417 |
| ESDCP 4.10 | ESCUTCHEON DOOR | 7 × 18 | 400 × 1000 | 7.43 | 16418 | 16419 |
| ESDCP 6.2 | ESCUTCHEON DOOR | 1 × 29 | 600 × 200 | 2.55 | 16430 | 16431 |
| ESDCP 6.4 | ESCUTCHEON DOOR | 2 × 29 | 600 × 400 | 4.39 | 16432 | 16433 |
| ESDCP 6.6 | ESCUTCHEON DOOR | 4 × 29 | 600 × 600 | 6.23 | 16434 | 16435 |
| ESDCP 6.8 | ESCUTCHEON DOOR | 6 × 29 | 600 × 800 | 8.55 | 16436 | 16437 |
| ESDCP 6.10 | ESCUTCHEON DOOR | 7 × 29 | 600 × 1000 | 9.90 | 16438 | 16439 |

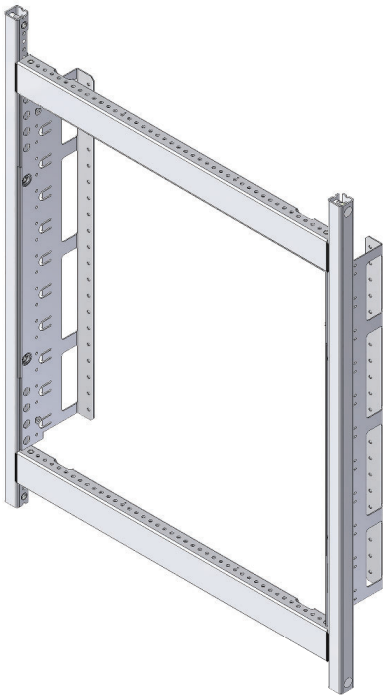

1

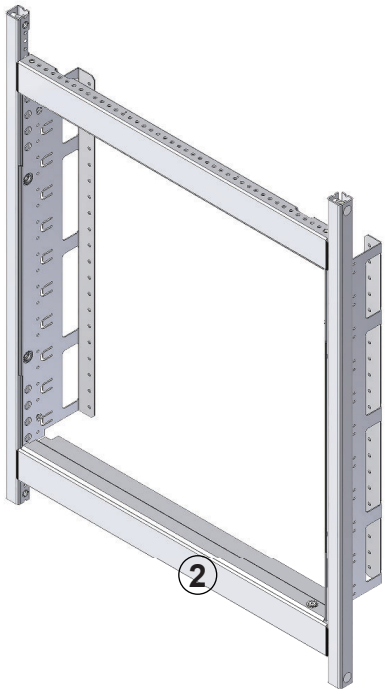

2

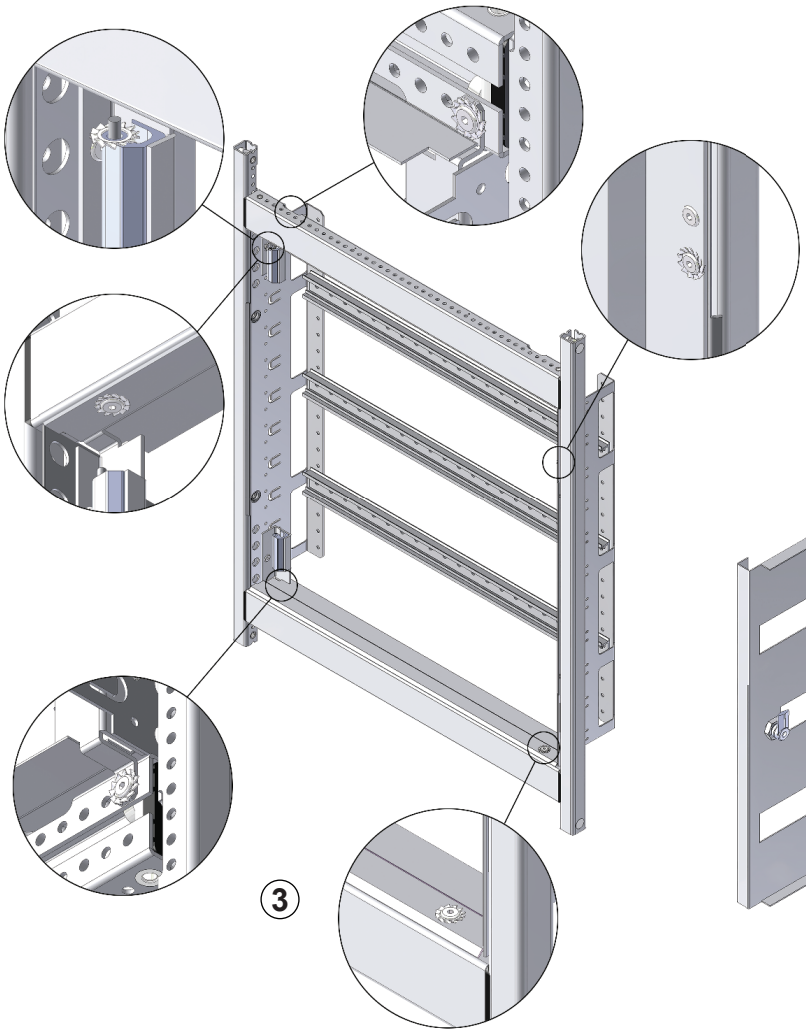

3

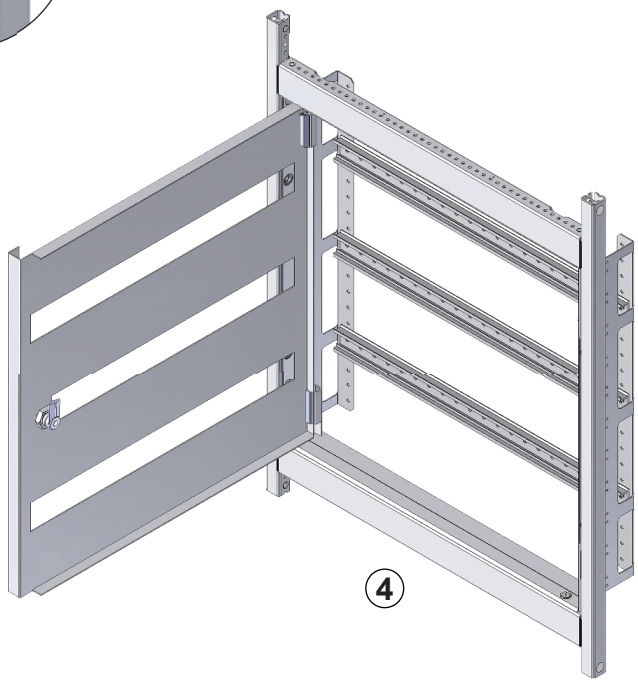

4

## PE BRASS BAR (FOR CHASSIS PROFILE)

## PE SKINNE MED BESLAG (TIL CHASSIS PROFIL)

| TYPE | DESCRIPTION | LENGTH | MAX. CABLE SIZE ($mm^2$) | NO. OF CONNECTING POINTS | WEIGHT (kg) | ORDER No. |
|---|---|---|---|---|---|---|
| PBBCP 1.1 | PE BRASS BAR - 6×9 | 300 | 10 | 21 | 0.19 | 66080 |
| PBBCP 1.2 | PE BRASS BAR - 6×9 | 400 | 10 | 34 | 0.23 | 66081 |
| PBBCP 1.3 | PE BRASS BAR - 6×9 | 500 | 10 | 46 | 0.27 | 66082 |
| PBBCP 1.4 | PE BRASS BAR - 6×9 | 600 | 10 | 59 | 0.30 | 66083 |
| PBBCP 1.5 | PE BRASS BAR - 6×9 | 800 | 10 | 84 | 0.38 | 66084 |
| PBBCP 2.1 | PE BRASS BAR - 8×10 | 300 | 16 | 19 | 0.24 | 66085 |
| PBBCP 2.2 | PE BRASS BAR - 8×10 | 400 | 16 | 30 | 0.30 | 66086 |
| PBBCP 2.3 | PE BRASS BAR - 8×10 | 500 | 16 | 41 | 0.36 | 66087 |
| PBBCP 2.4 | PE BRASS BAR - 8×10 | 600 | 16 | 52 | 0.42 | 66088 |
| PBBCP 2.5 | PE BRASS BAR - 8×10 | 800 | 16 | 74 | 0.53 | 66089 |
| PBBCP 3.1 | PE BRASS BAR - 8×12 | 300 | 25 | 17 | 0.26 | 66090 |
| PBBCP 3.2 | PE BRASS BAR - 8×12 | 400 | 25 | 27 | 0.33 | 66091 |
| PBBCP 3.3 | PE BRASS BAR - 8×12 | 500 | 25 | 37 | 0.39 | 66092 |
| PBBCP 3.4 | PE BRASS BAR - 8×12 | 600 | 25 | 47 | 0.46 | 66093 |
| PBBCP 3.5 | PE BRASS BAR - 8×12 | 800 | 25 | 67 | 0.59 | 66094 |

Brackets are included.

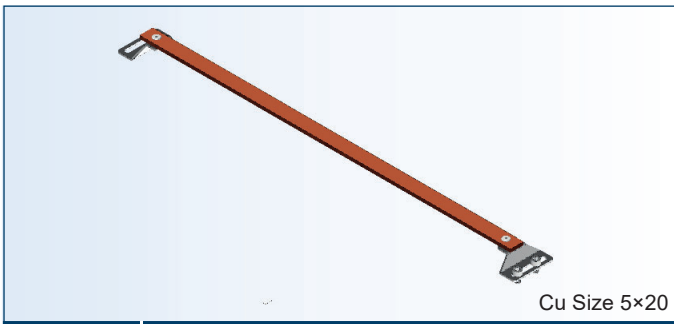

Cu Size 5×20

## PE COPPER BAR (FOR CHASSIS PROFILE)

## PE SKINNE MED BESLAG (TIL CHASSIS PROFIL)

| TYPE | DESCRIPTION | LENGTH | WEIGHT (kg) | ORDER No. |
|---|---|---|---|---|
| PCBCP 1.1 | PE COPPER BAR | 300 | 0.19 | 66077 |
| PCBCP 1.2 | PE COPPER BAR | 400 | 0.23 | 66078 |
| PCBCP 1.3 | PE COPPER BAR | 500 | 0.27 | 66079 |

Brackets are included.

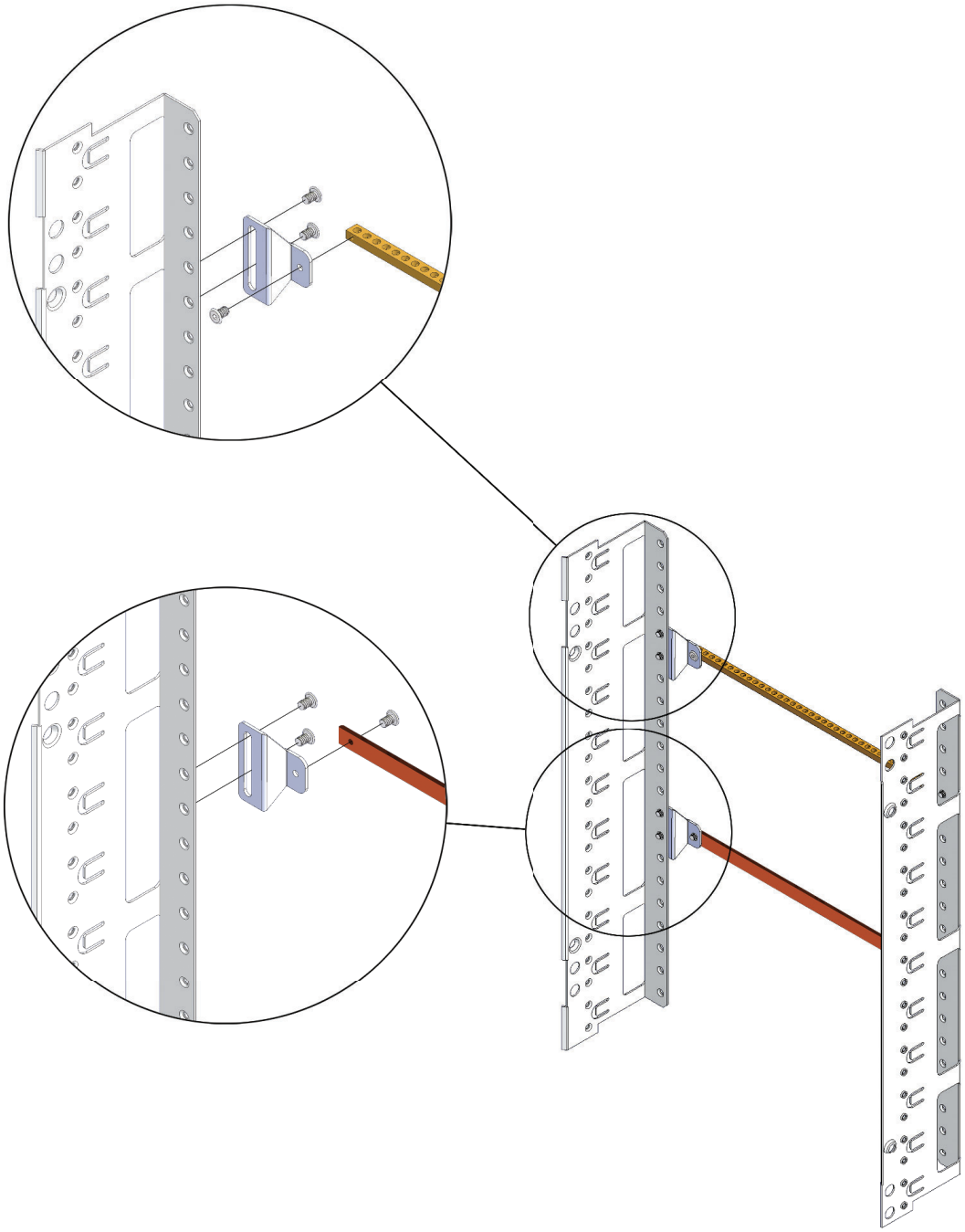

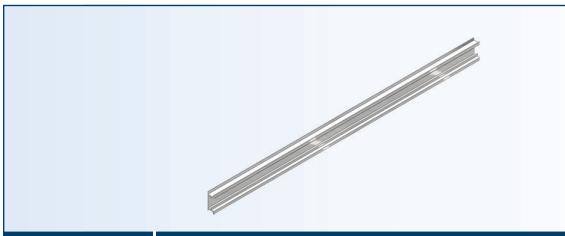

## DIN RAIL
## DIN SKINNE

| TYPE | DESCRIPTION | LENGTH | WEIGHT (kg) | ORDER No. Aluminium |
|---|---|---|---|---|
| ALDR 2 | DIN RAIL | 2000 | 0.764 | 65350 |
| ALDR 4 | DIN RAIL | 4000 | 1.530 | 65351 |

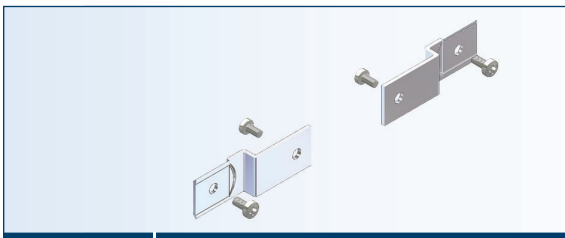

## BRACKETS (FOR DIN RAIL)
## BESLAG (TIL DIN SKINNE)

| TYPE | DESCRIPTION | WEIGHT (kg) | ORDER No. Zinc plated |
|---|---|---|---|
| BDR | BRACKETS FOR DIN RAIL | 0.06 | 65591 |

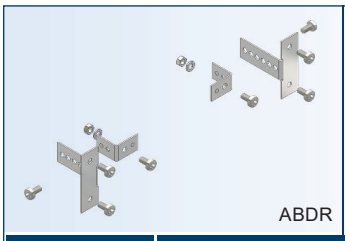
ABDR

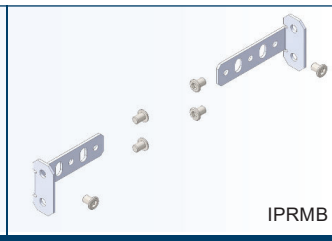
IPRMB

## BRACKETS
## BESLAG

| TYPE | DESCRIPTION | WEIGHT (kg) | ORDER No. Zinc plated |
|---|---|---|---|
| ABDR | ADJUSTABLE BRACKETS | 0.14 | 65592 |
| IPRMB | INSTANT PLATE REAR MOUNT BRACKETS | 0.075 | 65654 |

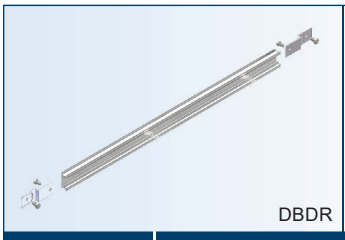
DBDR

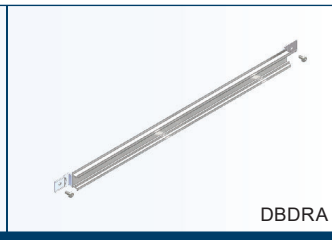
DBDRA

## DIN RAIL WITH BRACKETS
## HEL DIN SKINNE MED BESLAG

| TYPE | DESCRIPTION | WEIGHT (kg) | ORDER No. |
|---|---|---|---|
| DBDR 6 | DIN RAIL WITH BRACKETS | 0.22 | 65594 |
| DBDR 8 | DIN RAIL WITH BRACKETS | 0.35 | 65597 |
| DBDRA 6 | DIN RAIL WITH BRACKETS (ASSEMBLED) | 0.22 | 65590 |
| DBDRA 8 | DIN RAIL WITH BRACKETS (ASSEMBLED) | 0.35 | 65599 |

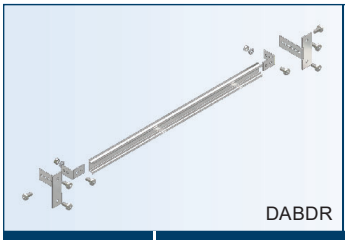
DABDR

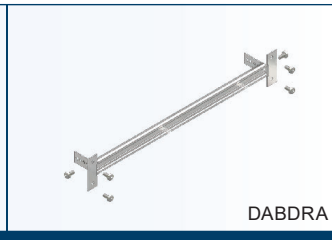
DABDRA

## DIN RAIL WITH ADJUSTABLE BRACKETS
## DIN SKINNE MED JUSTERBARE BESLAG

| TYPE | DESCRIPTION | WEIGHT (kg) | ORDER No. |
|---|---|---|---|
| DABDR 6 | DIN RAIL WITH ADJUSTABLE BRACKETS | 0.31 | 65595 |
| DABDR 8 | DIN RAIL WITH ADJUSTABLE BRACKETS | 0.53 | 65598 |
| DABDRA 6 | DIN RAIL WITH ADJUSTABLE BRACKETS (ASSEMBLED) | 0.31 | 65648 |
| DABDRA 8 | DIN RAIL WITH ADJUSTABLE BRACKETS (ASSEMBLED) | 0.53 | 65649 |

**Instruction for depth adjustable DIN Rail**

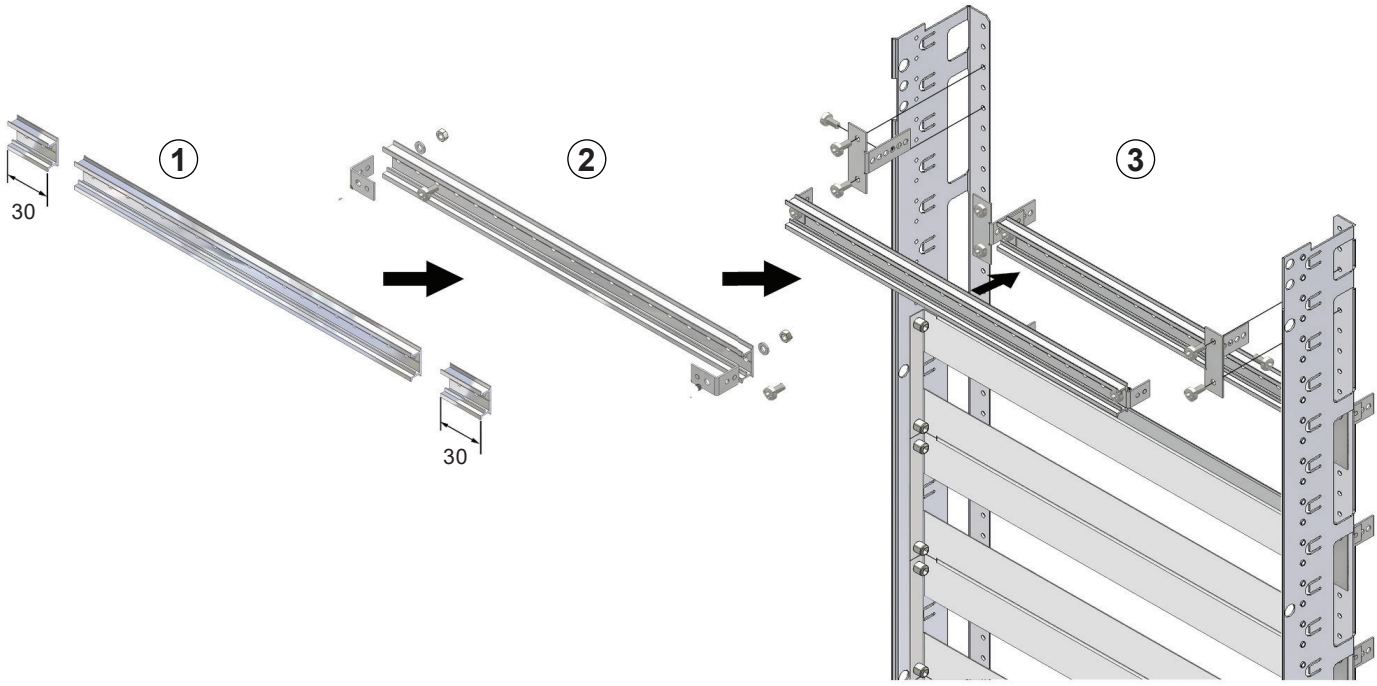


**Instruction for instant plate rear mount brackets**

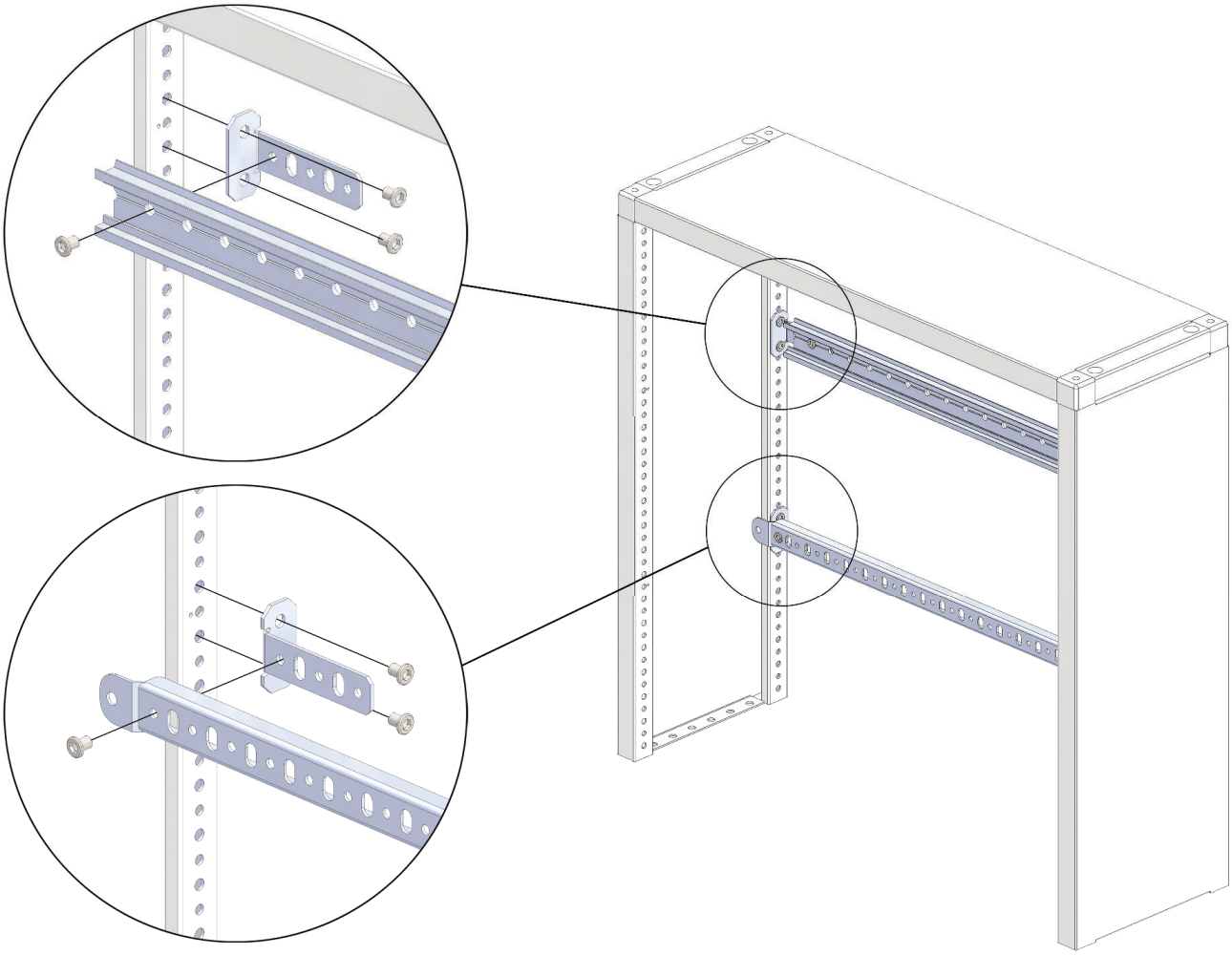

## 40mm wide cable trays with front access!

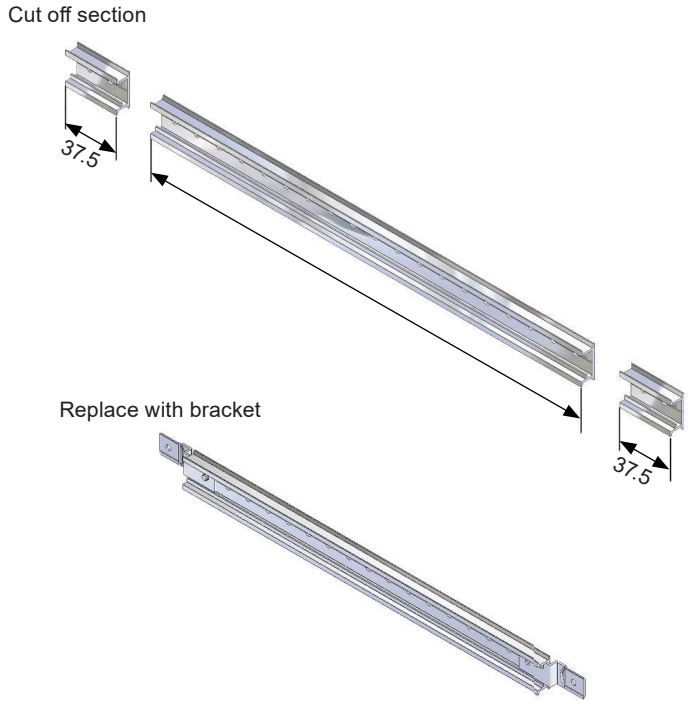


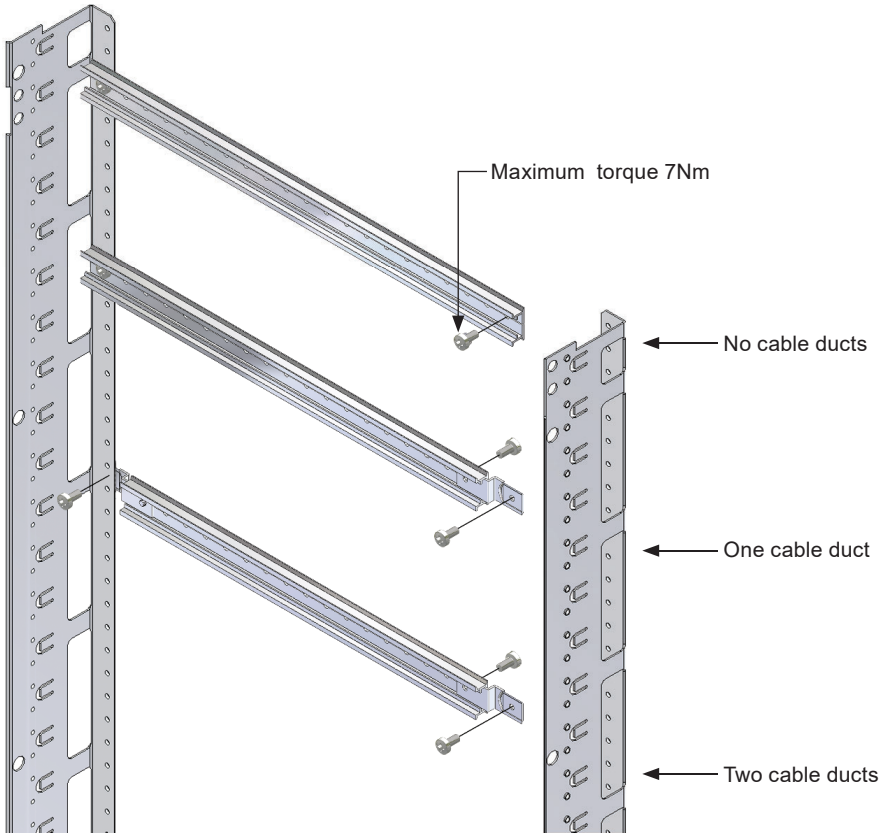

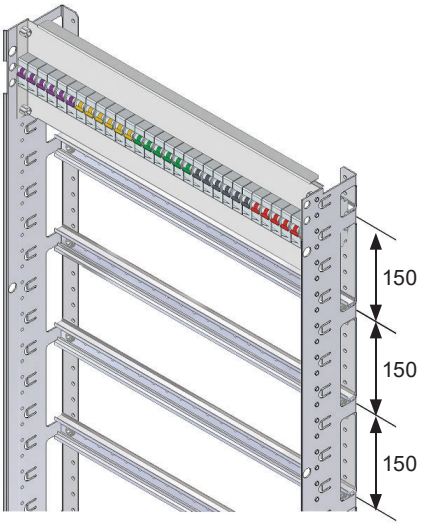


Compact - 150mm between DIN rails.
All cables laid with cable ties.

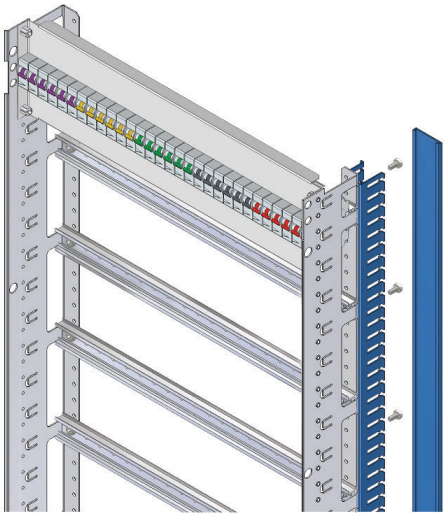

Compact - all cables laid in
cable ducts on the rear.

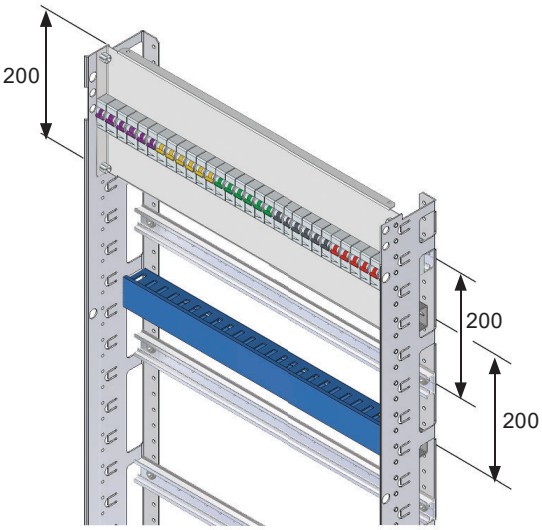


Cable duct - between DIN rails.

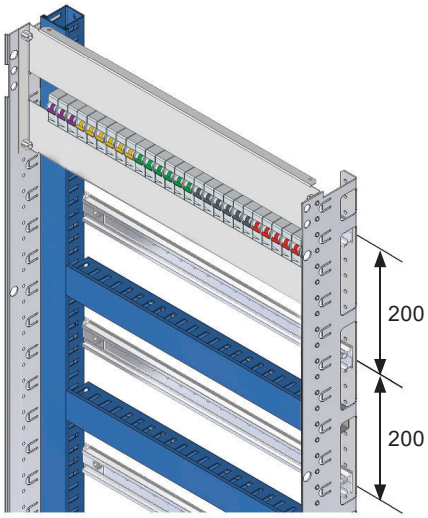


Wide space - 200mm between DIN rails.
Front access to cable ducts
1 vertical cable duct.

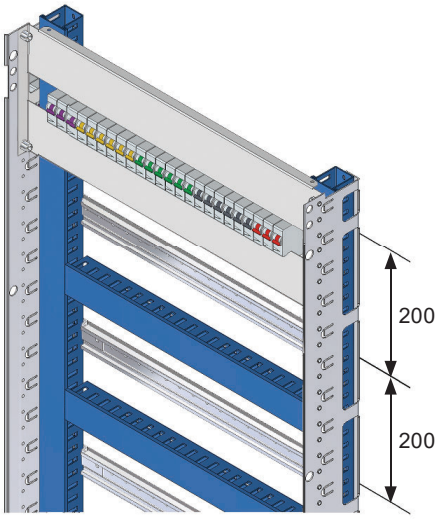


Wide space - 200mm between DIN rails.
Front access to cable ducts
2 vertical cable ducts.

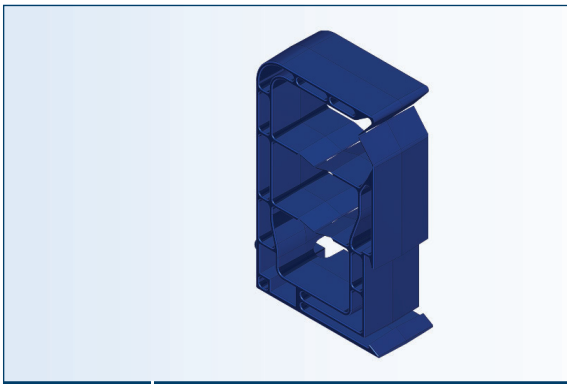

## CABLE CLIP

## KABEL HOLDER

| TYPE | DESCRIPTION | WEIGHT (kg) | ORDER No. |
|---|---|---|---|
| CCP | CABLE CLIP | 0.31 | 14370 |

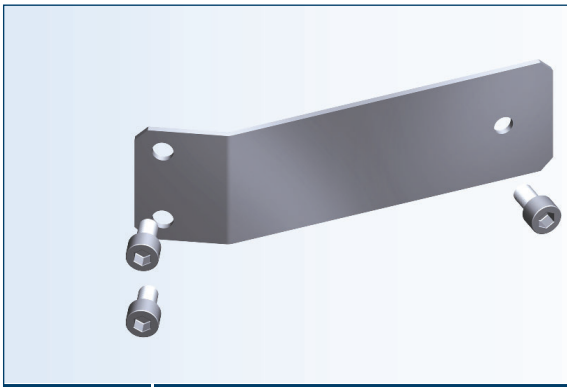

## DIN RAIL HOLDER

## DIN SKINNE HOLDER

| TYPE | DESCRIPTION | WEIGHT (kg) | ORDER No. |
|---|---|---|---|
| DRHD | DIN RAIL HOLDER | 0.88 | 65593 |

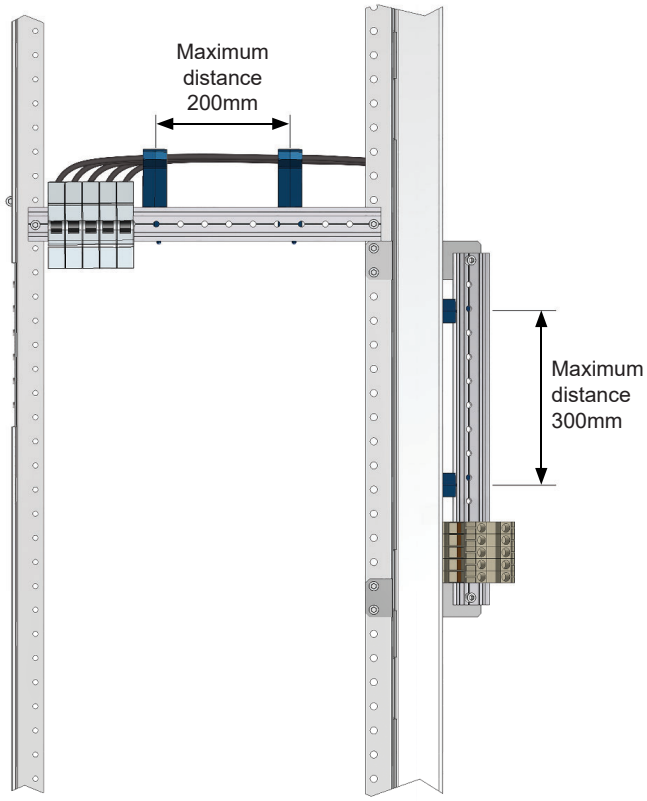


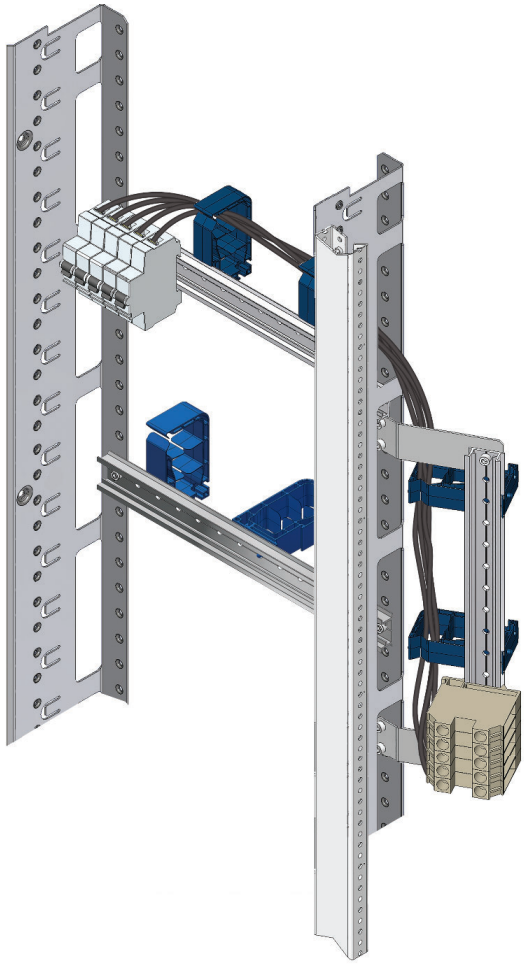

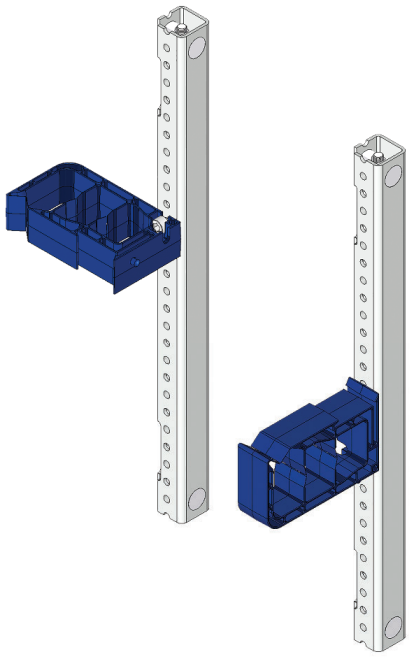

Tip!
**You can separate incoming - outgoing and bus in 3 different compartments.**

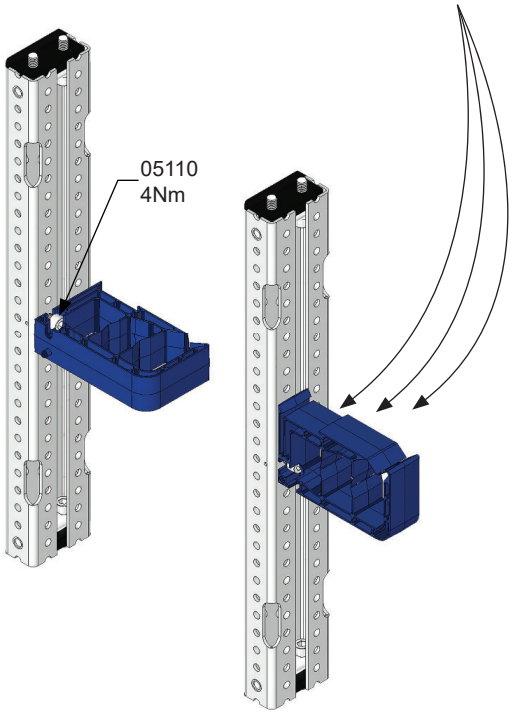

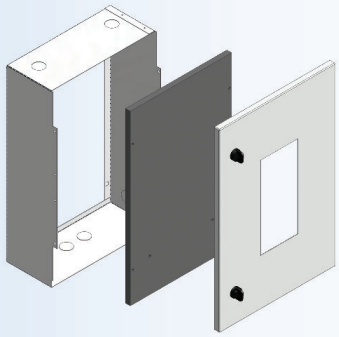

## DANISH STANDARD METER COMPARTMENT

## DANSK STANDARD MÅLER FELT

x 03

| TYPE | DESCRIPTION | SIZE (W×H×D) | WEIGHT (kg) | VERSION 3 ORDER No. RAL 7035 FTF. |
|---|---|---|---|---|
| DSMC 4 | DANISH STANDARD METER COMPARTMENT | 400×600×200 | 6.74 | 31117 |
| DSMC 6 | DANISH STANDARD METER COMPARTMENT | 600×600×200 | 9.81 | 31127 |

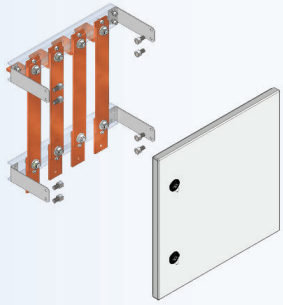

## CT INSERT

## STRØMMÅLER INDSATS

CURRENT TRANSFORMER INSERT

| TYPE | DESCRIPTION | RATED CURRENT | Cu SIZE | SIZE (W×H) | WEIGHT (kg) | VERSION 3 ORDER No. RAL 7035 FTF. |
|---|---|---|---|---|---|---|
| CTIN 4 | CT INSERT | 400 | 5×40 | 400×400 | 6.97 | 31157 |
| CTIN 8 | CT INSERT | 800 | 10×40 | 400×400 | 11.77 | 31167 |
| CTIN 12,5 | CT INSERT | 1250 | 10×50 | 600×400 | 13.79 | 31197 |

## DOOR SEAL SYSTEM

## PLOMBERINGSSÆT

| TYPE | DESCRIPTION | WEIGHT (kg) | VERSION 3 ORDER No. Steel Black |
|---|---|---|---|
| DSES | DOOR SEAL SYSTEM | 0.1 | 30859 |

## POLYCARBONATE SEPARATION PLATE

## POLYCARBONAT SEPERATIONSPLADE

2mm

| TYPE | DESCRIPTION | SIZE (W×H) | WEIGHT (kg) | ORDER No. |
|---|---|---|---|---|
| PSP 2.18 | POLYCARBONATE SEPARATION PLATE | 200 × 1800 | 0.67 | 16924 |
| PSP 2.20 | POLYCARBONATE SEPARATION PLATE | 200 × 2000 | 0.75 | 16927 |
| PSP 3.18 | POLYCARBONATE SEPARATION PLATE | 300 × 1800 | 1.08 | 16884 |
| PSP 3.20 | POLYCARBONATE SEPARATION PLATE | 300 × 2000 | 1.20 | 16887 |

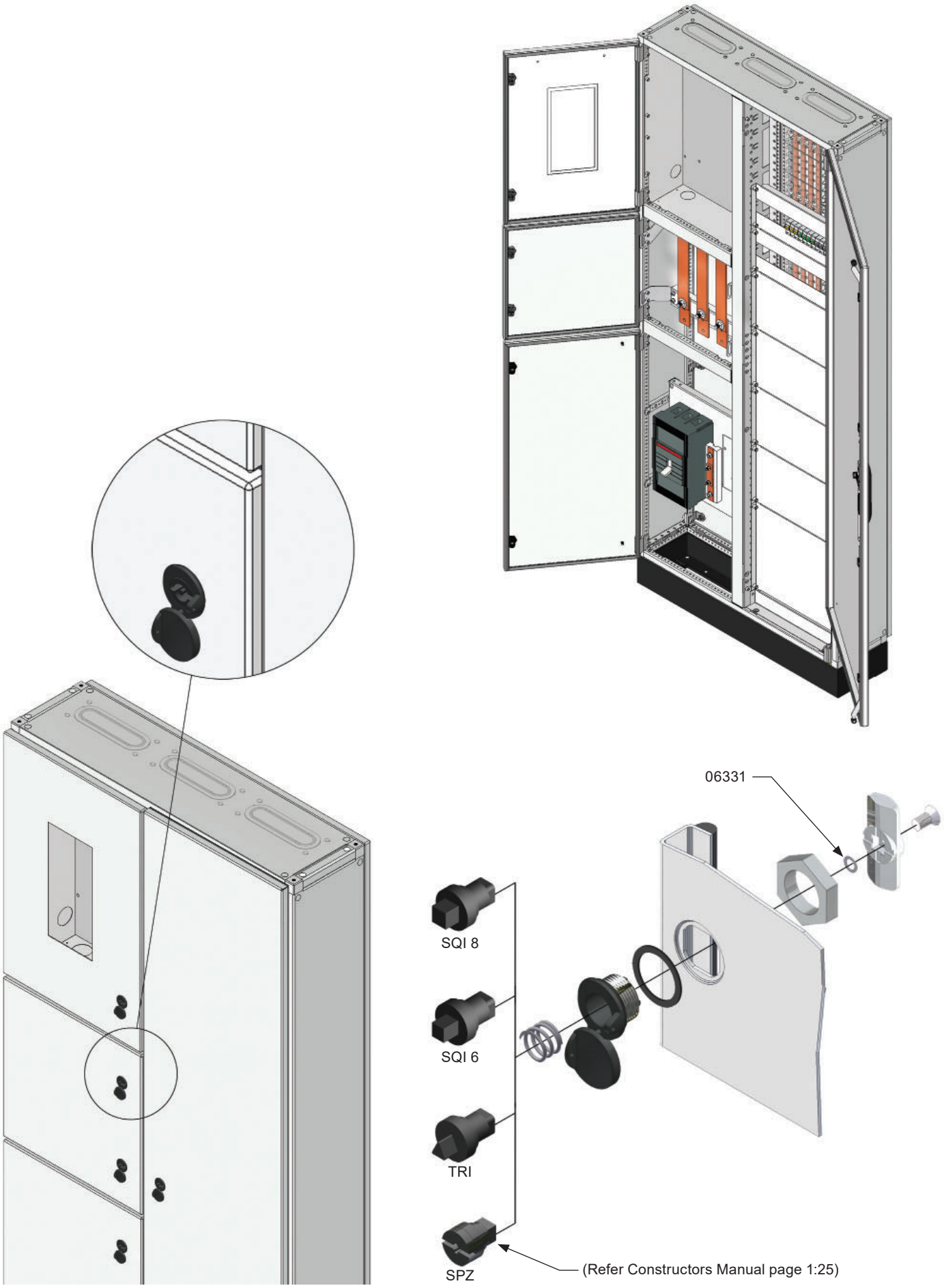
06331
SQI 8
SQI 6
TRI
SPZ
(Refer Constructors Manual page 1:25)

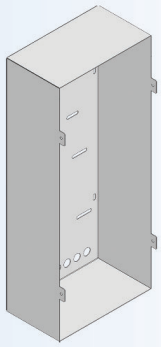

## NORWEGIAN STANDARD METER COMPARTMENT

## NORSK STANDARD MÅLER FELT

| TYPE | DESCRIPTION | SIZE (W×H×D) | QUANTITY OF METERS | WEIGHT (kg) | ORDER No. RAL 9010 SMF. | ORDER No. RAL 7035 SMF. |
|---|---|---|---|---|---|---|
| MCFO 3.6.2 | NORWEGIAN STANDARD METER COMPAR. | 300 × 600 × 200 | 1 | 2.80 | 65671 | 66030 |
| MCFO 3.10.2 | NORWEGIAN STANDARD METER COMPAR. | 300 × 1000 × 200 | 2 | 4.40 | 65672 | 66031 |
| MCFO 3.12.2 | NORWEGIAN STANDARD METER COMPAR. | 300 × 1200 × 200 | 3 | 5.19 | 65673 | 66032 |
| MCFO 3.14.2 | NORWEGIAN STANDARD METER COMPAR. | 300 × 1400 × 200 | 3 | 6.02 | 65674 | 66033 |
| MCFO 4.4.2 | NORWEGIAN STANDARD METER COMPAR. | 400 × 400 × 200 | 1 | 2.45 | 65663 | 66034 |
| MCFO 4.6.2 | NORWEGIAN STANDARD METER COMPAR. | 400 × 600 × 200 | 1 | 3.45 | 65664 | 66035 |
| MCFO 4.8.2 | NORWEGIAN STANDARD METER COMPAR. | 400 × 800 × 200 | 2 | 4.39 | 65691 | 66036 |
| MCFO 4.10.2 | NORWEGIAN STANDARD METER COMPAR. | 400 × 1000 × 200 | 2 | 5.36 | 65692 | 66037 |
| MCFO 4.12.2 | NORWEGIAN STANDARD METER COMPAR. | 400 × 1200 × 200 | 3 | 6.31 | 65693 | 66038 |
| MCFO 6.4.2 | NORWEGIAN STANDARD METER COMPAR. | 600 × 400 × 200 | 2 | 3.39 | 65694 | 66039 |
| MCFO 6.6.2 | NORWEGIAN STANDARD METER COMPAR. | 600 × 600 × 200 | 2 | 4.69 | 65695 | 66040 |
| MCFO 6.8.2 | NORWEGIAN STANDARD METER COMPAR. | 600 × 800 × 200 | 4 | 5.89 | 65696 | 66041 |
| MCFO 6.10.2 | NORWEGIAN STANDARD METER COMPAR. | 600 × 1000 × 200 | 4 | 7.17 | 65697 | 66042 |
| MCFO 6.12.2 | NORWEGIAN STANDARD METER COMPAR. | 600 × 1200 × 200 | 6 | 8.38 | 65698 | 66043 |
| MCFO 6.14.2 | NORWEGIAN STANDARD METER COMPAR. | 600 × 1400 × 200 | 6 | 9.67 | 65699 | 66044 |
| MCFO 8.6.2 | NORWEGIAN STANDARD METER COMPAR. | 800 × 600 × 200 | 3 | 5.93 | 65682 | 66045 |
| MCFO 8.10.2 | NORWEGIAN STANDARD METER COMPAR. | 800 × 1000 × 200 | 6 | 8.98 | 65683 | 66046 |
| MCFO 8.12.2 | NORWEGIAN STANDARD METER COMPAR. | 800 × 1200 × 200 | 9 | 12.51 | 65684 | 66047 |
| MCFO 8.14.2 | NORWEGIAN STANDARD METER COMPAR. | 800 × 1400 × 200 | 9 | 14.42 | 65685 | 66048 |

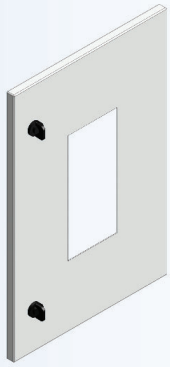

## DOOR (FOR NORWEGIAN STANDARD METER COMPARTMENT)

## DØR (TIL NORSK STANDARD MÅLER FELT)

| TYPE | DESCRIPTION | SIZE (W×H) | WEIGHT (kg) | VERSION 3 ORDER No. RAL 7035 FTF. |
|---|---|---|---|---|
| DMCF 3.6 | DOOR | 300×600 | 1.50 | 65707 |
| DMCF 6.6 | DOOR | 600×600 | 3.52 | 65717 |

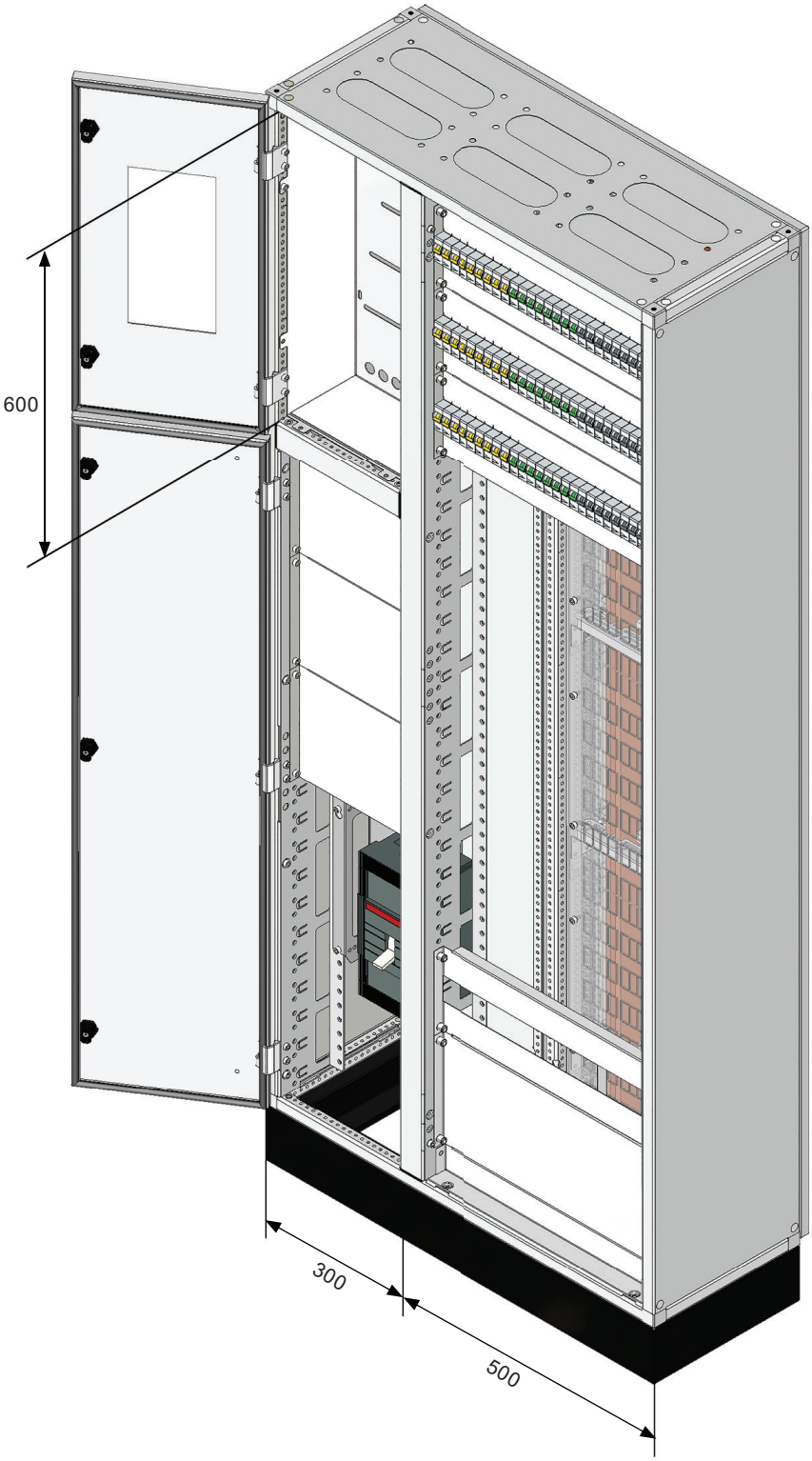
600
300
500

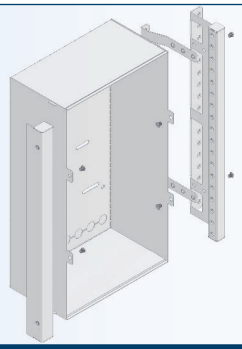

## NORWEGIAN STANDARD METER COMPARTMENT (FOR CHASSIS PROFILE)

## NORSK STANDARD MÅLER FELT (TIL CHASSIS PROFIL)

| TYPE | DESCRIPTION | SIZE (W×H×D) | WEIGHT (kg) | ORDER No. RAL 7035 FTF. |
|---|---|---|---|---|
| MCNS 3.4-5.2 | NORWEGIAN STANDARD METER COMPARTMENT | 300×450×200 | 3.45 | 65756 |

## MOUNTING PLATE (FOR NORWEGIAN STANDARD METER COMPARTMENT)

## MONTAGE PLADE (TIL NORSK STANDARD MÅLER FELT)

| TYPE | DESCRIPTION | SIZE (W×H) | WEIGHT (kg) | ORDER No. RAL 7035 FTF. |
|---|---|---|---|---|
| MPNMC 3.4-5 | MOUNTING PLATE | 300×450 | 0.95 | 65757 |

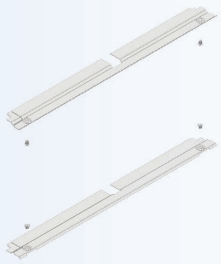

## FILLER PROFILES (FOR NORWEGIAN STANDARD METER COMPARTMENT)

## AFDÆKNING PROFIL (TIL NORSK STANDARD MÅLER FELT)

| TYPE | DESCRIPTION | SIZE (W) | WEIGHT (kg) | ORDER No. RAL 7035 FTF. |
|---|---|---|---|---|
| FPNMC 6 | FILLER PROFILES | 600 | 0.49 | 65758 |
| FPNMC 8 | FILLER PROFILES | 800 | 0.67 | 65759 |

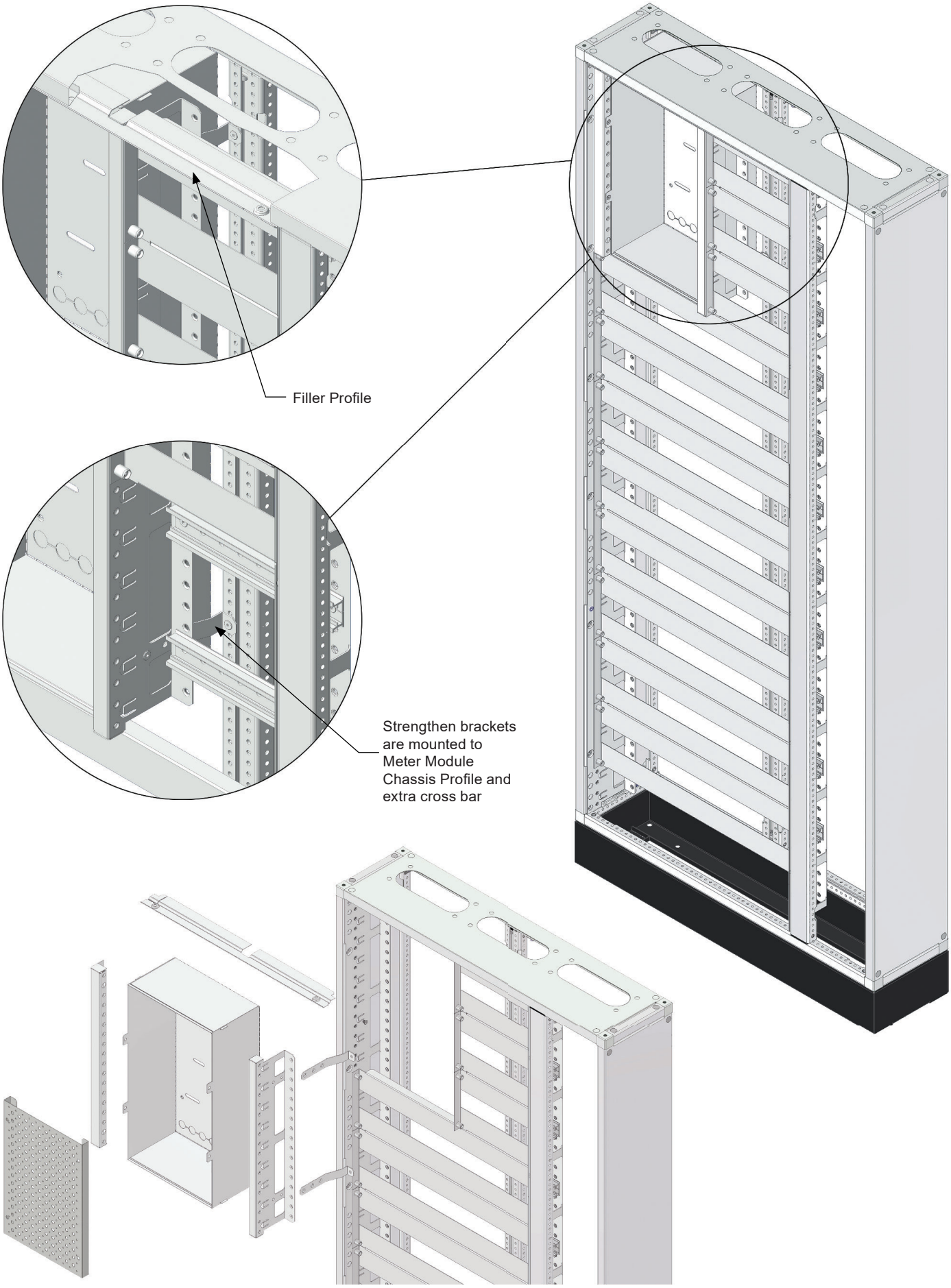
Filler Profile
Strengthen brackets are mounted to Meter Module Chassis Profile and extra cross bar

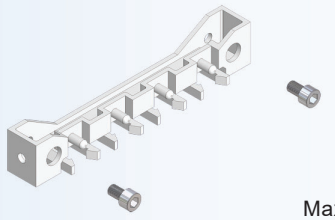

## BUSBAR HOLDER
## SKINNE HOLDER

Max. 16kA/0.5 Sec

| TYPE | DESCRIPTION | SIZE | MAX. Cu SIZE | MAX. QTY. CONDUCTORS PER PHASE | PHASE CENTERS | WEIGHT (kg) | ORDER No. |
|---|---|---|---|---|---|---|---|
| BAH | BUSBAR HOLDER | 25×25×150 | 5×15 | 1 | 30 | 0.03 | 20300 |

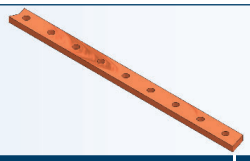

## Cu BUSBAR 250A
## Cu SKINNER 250A

| TYPE | DESCRIPTION | SIZE (H×W×L) | CROSS SECTIONAL AREA (Sqr mm) | LENGTH | WEIGHT (kg) | ORDER No. |
|---|---|---|---|---|---|---|
| BSB | Cu BUSBAR 250A | 5×15×4000 | 75 | 4000 | 2.89 | 20330 |

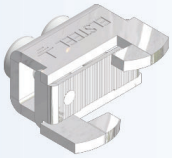

MAX. 70□

x10 Nos

## BUSBAR CLAMP (FOR 5×15 Cu)
## KLEMME (FOR Cu SKINNE)

| TYPE | DESCRIPTION | WEIGHT (kg) | ORDER No. |
|---|---|---|---|
| BBCL15 | BUSBAR CLAMP | 0.048 | 20195 |

9Nm

x100 Nos.

## TERMINAL SCREWS
## TERMINAL SKRUER

| TYPE | DESCRIPTION | SIZE | WEIGHT (kg) | ORDER No. |
|---|---|---|---|---|
| SCR | TERMINAL SCREWS | M6 | 0.51 | 20360 |

Polycarbonate 3mm

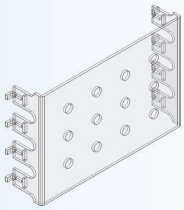

x10 Nos.

## COVERS FORM 2
## AFDÆKNING FORM 2

| TYPE | DESCRIPTION | SIZE (W×H) | WEIGHT kg | ORDER No. |
|---|---|---|---|---|
| COF 2 | COVERS FORM 2 | 150 × 100 | 0.36 | 20390 |

x100 Nos.

## CABLES
## KABEL

| TYPE | DESCRIPTION | LENGTH | ORDER No. |
|---|---|---|---|
| CABL 1 | CABLE 2.5 $mm^2$ | 350 | 65686 |
| CABL 2 | CABLE 4 $mm^2$ | 350 | 65687 |
| CABL 3 | CABLE 6 $mm^2$ | 350 | 65688 |
| CABL 4 | CABLE 10 $mm^2$ | 350 | 65689 |
| CABL 5 | CABLE 16 $mm^2$ | 350 | 65690 |

1

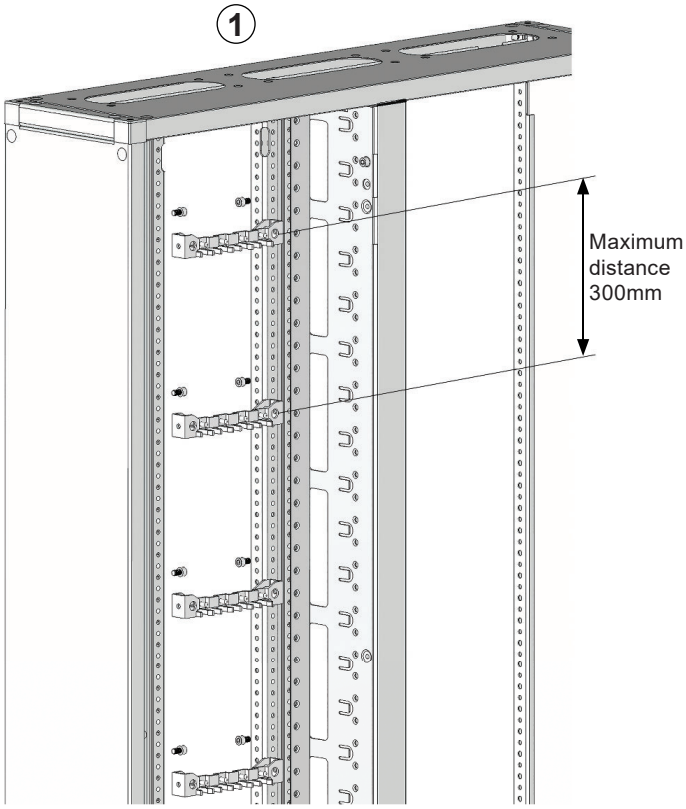
Maximum
distance
300mm

2

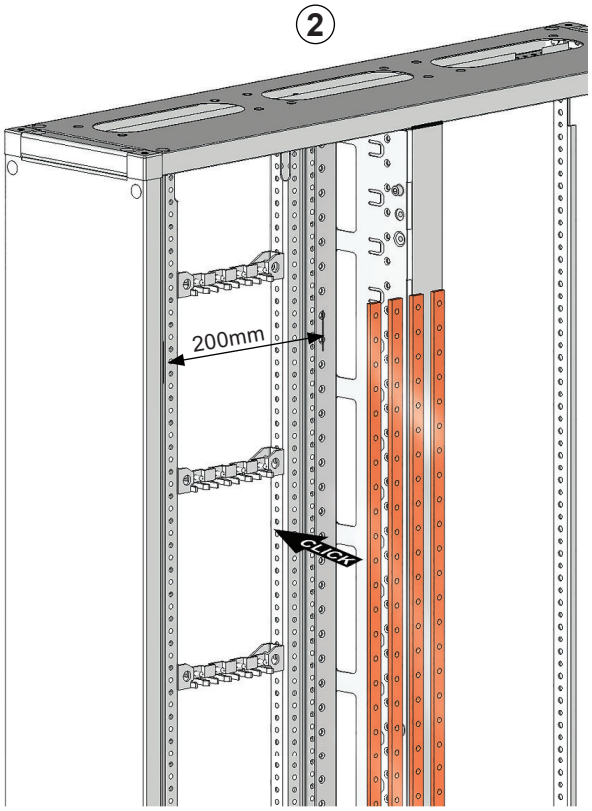
200mm
CLICK

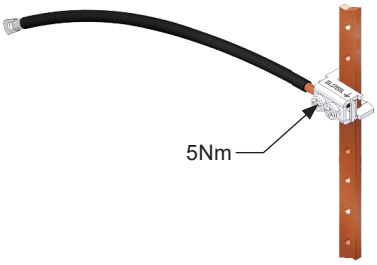
5Nm

3

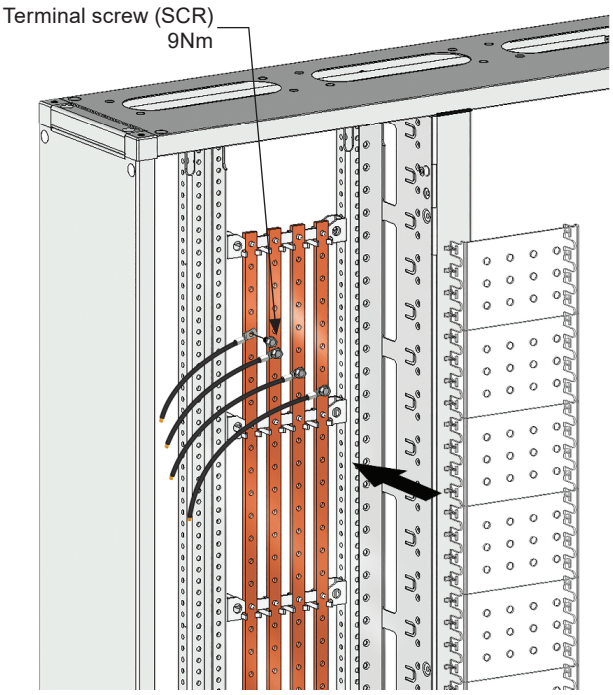
Terminal screw (SCR)
9Nm

4

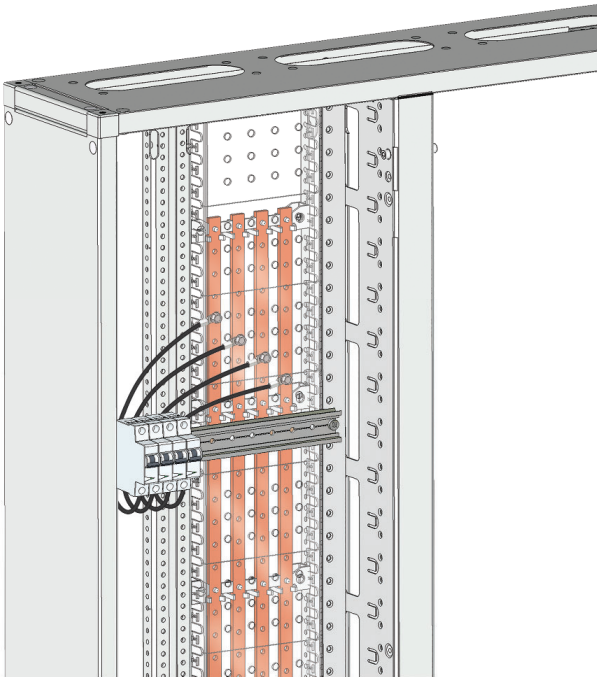

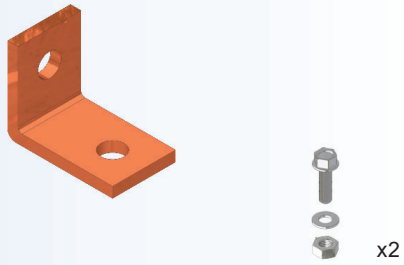


## BUSBAR ANGLE 5 (FOR CT INSERT)

## SKINNEVINKEL 5 (TIL STRØMMÅLER INDSATS)

| TYPE | DESCRIPTION | SIZE | WEIGHT (kg) | ORDER No. |
|---|---|---|---|---|
| BAN 5 | BUSBAR ANGLE 5 | 40×50×5 | 0.1 | 21456 |

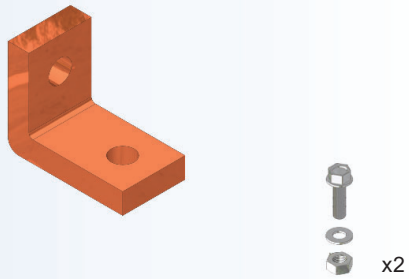


## BUSBAR ANGLE 10 (FOR CT INSERT)

## SKINNEVINKEL 10 (TIL STRØMMÅLER INDSATS)

| TYPE | DESCRIPTION | SIZE | WEIGHT (kg) | ORDER No. |
|---|---|---|---|---|
| BAN 10 | BUSBAR ANGLE 10 | 45×55×10 | 0.205 | 21458 |

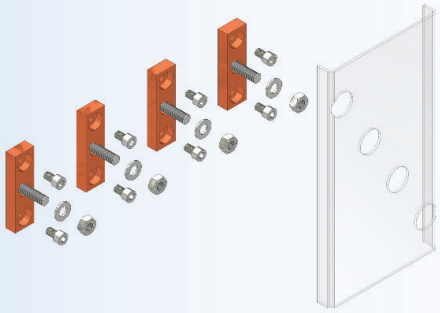

## BUSBAR BOLT

## SKINNE BOLT

| TYPE | DESCRIPTION | SIZE | RATED CURRENT (A) | WEIGHT (kg) | ORDER No. |
|---|---|---|---|---|---|
| BBT 8 | BUSBAR BOLT | M8 | 400 | 6.5 | 21452 |
| BBT 10 | BUSBAR BOLT | M10 | 400 | 6.6 | 21454 |

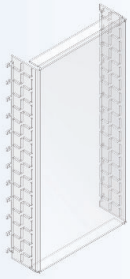

## FORM 2 PC COVER

## FORM 2 AFDÆKNING

| TYPE | DESCRIPTION | WEIGHT (kg) | ORDER No. |
|---|---|---|---|
| F2PC | FORM 2 PC COVER | 1.7 | 20393 |

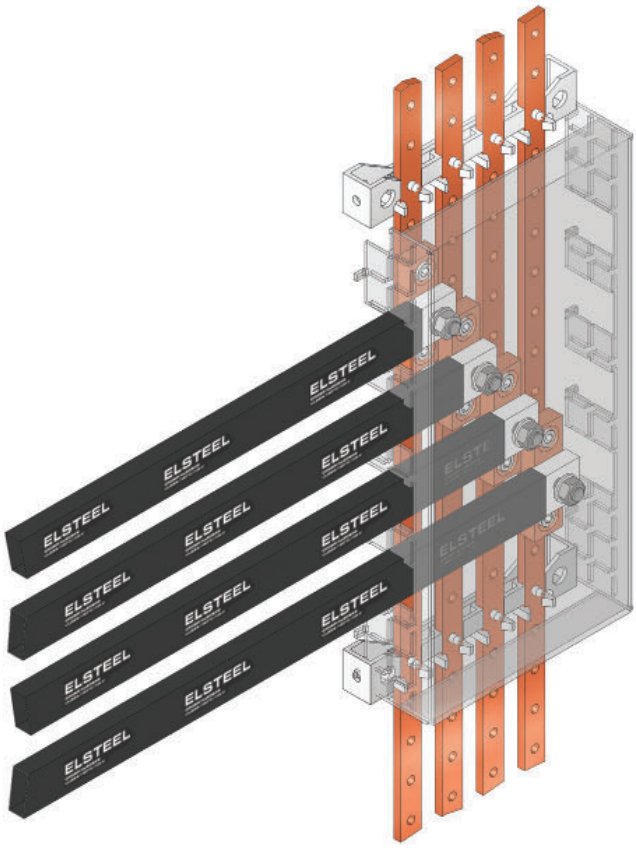
ELSTEEL

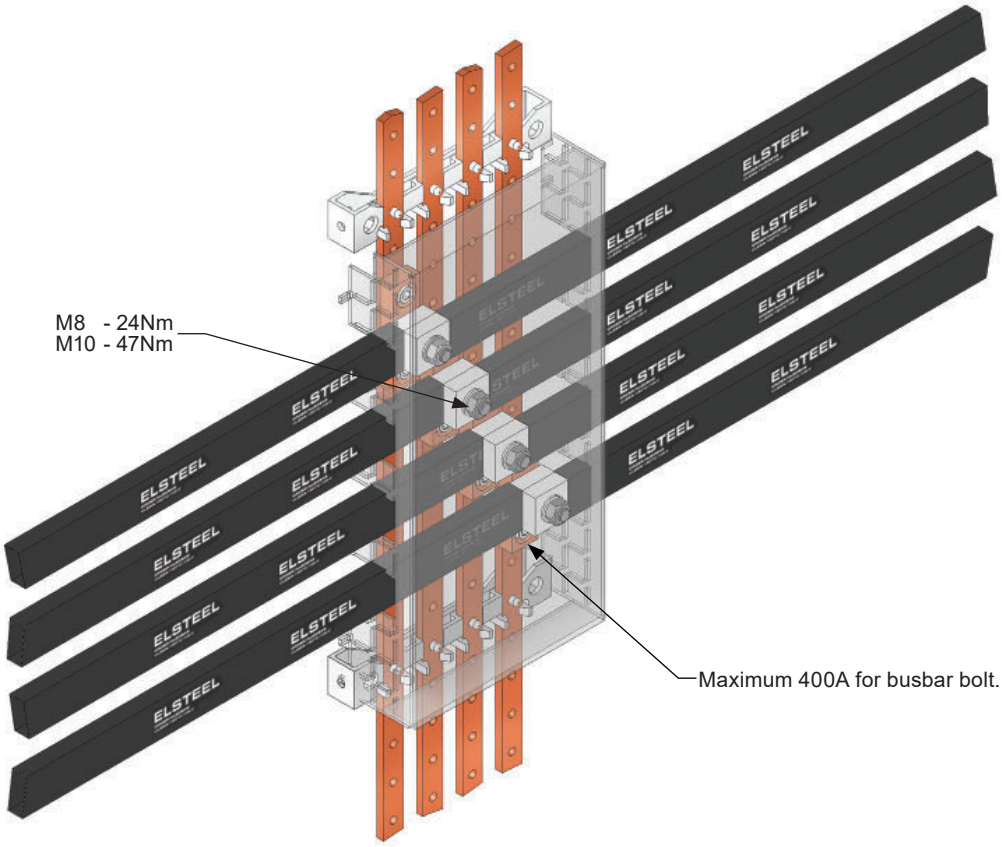
M8 - 24Nm
M10 - 47Nm
Maximum 400A for busbar bolt.
ELSTEEL

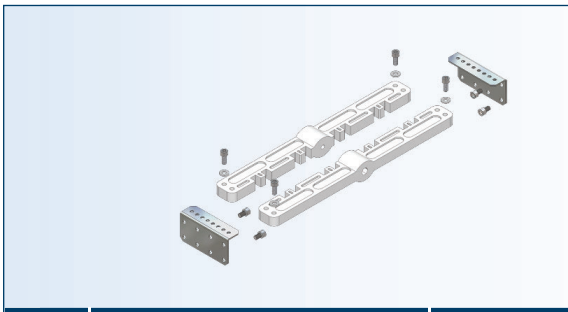

## UNIVERSAL BUSBAR HOLDER (FOR Cu BUSBAR)

## UNIVERSAL SKINNEHOLDER (TIL Cu SKINNE)

| TYPE | DESCRIPTION | RAIL LENGTH | MAX. Cu SIZE | MAX. QTY. CONDUCTORS PER PHASE | PHASE CENTERS | WEIGHT (kg) | ORDER No. |
|---|---|---|---|---|---|---|---|
| UBH 1 | UNIVERSAL BUSBAR HOLDER | 90 | 10×40 | 2 | 75 | 0.59 | 20550 |

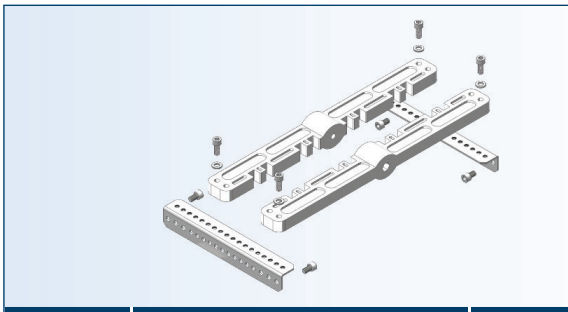

## UNIVERSAL BUSBAR HOLDER (FOR Al BUSBAR)

## UNIVERSAL SKINNEHOLDER (TIL Al SKINNE)

| TYPE | DESCRIPTION | RAIL LENGTH | MAX. Al SIZE | MAX. QTY. CONDUCTORS PER PHASE | PHASE CENTERS | WEIGHT (kg) | ORDER No. |
|---|---|---|---|---|---|---|---|
| UBH 2 | UNIVERSAL BUSBAR HOLDER | 190 | 10×100 | 2 | 75 | 0.65 | 20560 |
| UBH 3 | UNIVERSAL BUSBAR HOLDER | 390 | 10×100 | 2 | 75 | 0.90 | 20563 |

Note : For full technical specification, please refer to relevant design verification on www.elsteel.com
IEC 61439-2 requirements regarding busbar clearances must be followed when installing any busbar system.

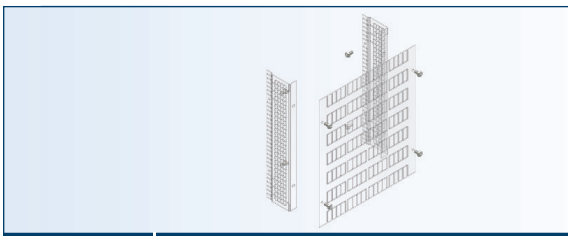

## FORM 2 COVER (FOR UBH)

## FORM 2 AFDÆKNING (TIL UBH)

| TYPE | DESCRIPTION | SIZE (W×H) | WEIGHT (kg) | ORDER No. |
|---|---|---|---|---|
| F2CUB | FORM 2 COVER | 350×400 | 0.57 | 20391 |

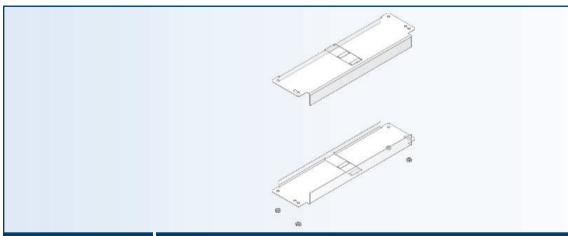

## TOP & BOTTOM FORM 2 COVER (FOR UBH)

## TOP & BUND FORM 2 AFDÆKNING (TIL UBH)

| TYPE | DESCRIPTION | SIZE (W×H) | WEIGHT (kg) | ORDER No. |
|---|---|---|---|---|
| F2CTB | TOP & BOTTOM FORM 2 COVER | | 0.16 | 20392 |

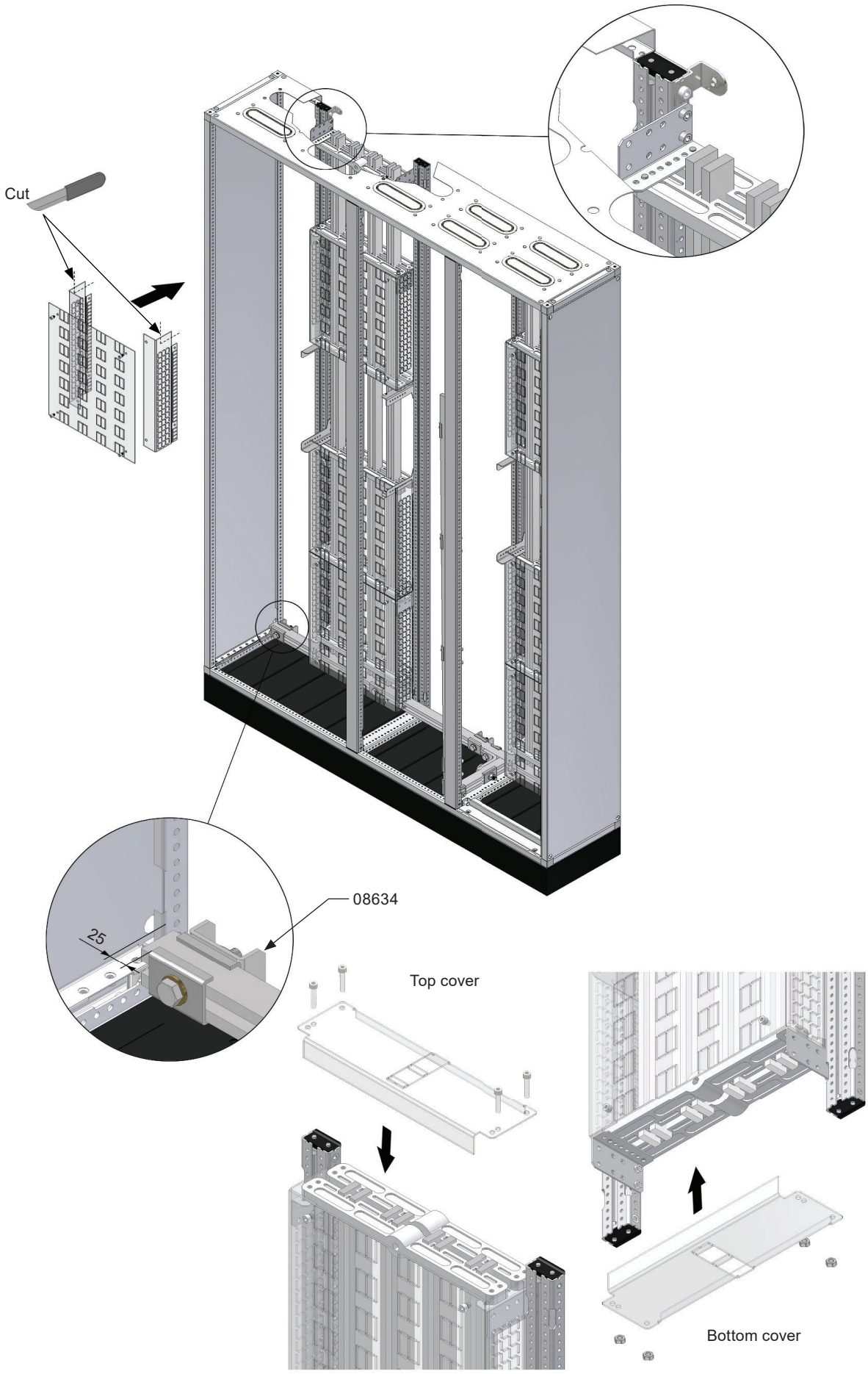
Cut
08634
25
Top cover
Bottom cover

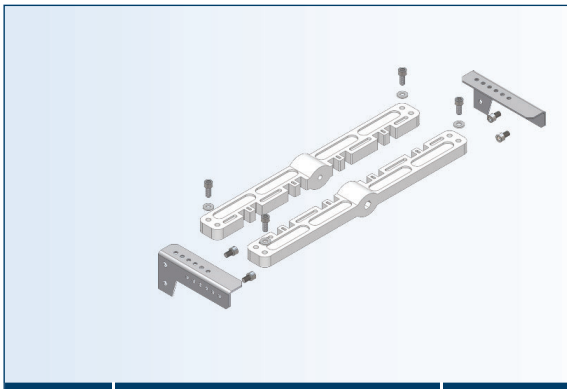

## UNIVERSAL BUSBAR HOLDER (FOR HORIZONTAL TO VERTICAL CONNECTION)

## UNIVERSAL SKINNEHOLDER (TIL HORISONTAL-VERTIKAL FORBINDELSE)

| TYPE | DESCRIPTION | RAIL LENGTH | MAX. Cu SIZE | MAX. QTY. CONDUCTORS PER PHASE | PHASE CENTRES | WEIGHT (kg) | ORDER No. |
|---|---|---|---|---|---|---|---|
| UBH1 HV | UNIVERSAL BUSBAR HOLDER | 90 | 10×40 | 2 | 75 | 0.611 | 20890 |

Note : For full technical specification, please refer to relevant design verification on www.elsteel.com
IEC 61439-2 requirements regarding busbar clearances must be followed when installing any busbar system.

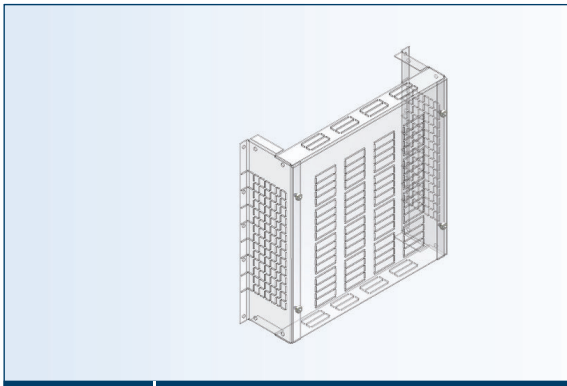

## FORM 2 COVERS (FOR HORIZONTAL TO VERTICAL CONNECTION)

## AFDÆKNING (TIL HORISONTAL-VERTIKAL FORBINDELSE)

| TYPE | DESCRIPTION | SIZE (W×H) | WEIGHT (kg) | ORDER No. |
|---|---|---|---|---|
| F2CHT | FORM 2 COVERS | | 0.75 | 20395 |

CF2CP4

CF2CP6

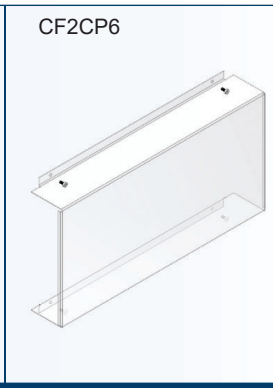

## CROSS OVER FORM 2 COVER PLATE

## FORM 2 AFDÆKNING

| TYPE | DESCRIPTION | SIZE (W) | WEIGHT (kg) | ORDER No. |
|---|---|---|---|---|
| CF2CP4 | CROSS OVER FORM 2 COVER PLATE | 400 | 1.25 | 20396 |
| CF2CP6 | CROSS OVER FORM 2 COVER PLATE | 600 | 1.88 | 20397 |

## 400 WIDE SECTION

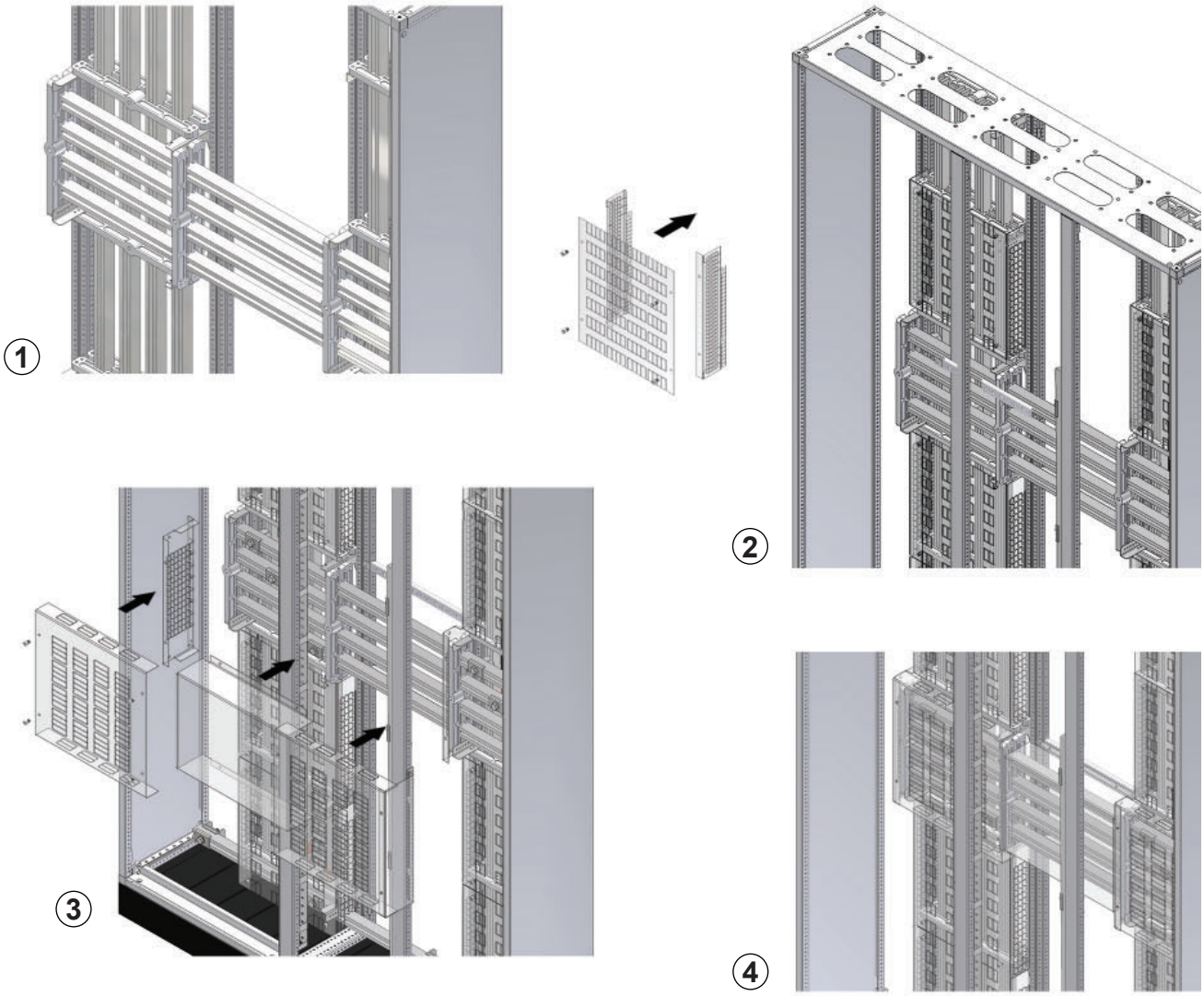


## 600 WIDE SECTION

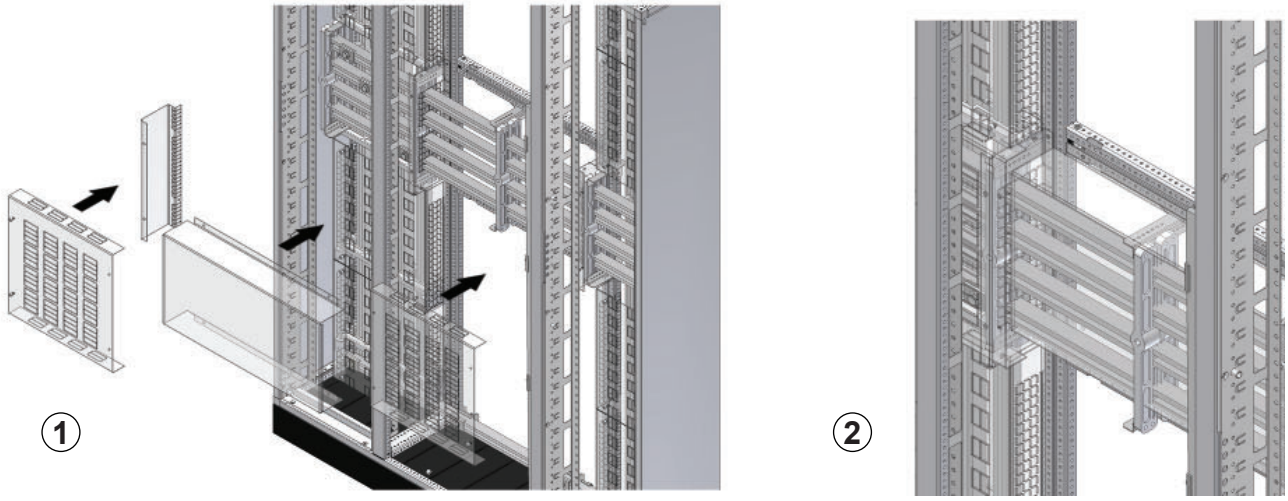

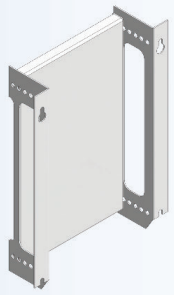

## ADJUSTABLE MOUNTING PLATE

## JUSTERBAR MONTAGEPLADE

| TYPE | DESCRIPTION | SIZE (W×H) | WEIGHT (kg) | ORDER No. Alu-zinc |
|---|---|---|---|---|
| AMDB 3.1-5 | ADJUSTABLE MOUNTING PLATE | 300×150 | 0.62 | 65430 |
| AMDB 3.2 | ADJUSTABLE MOUNTING PLATE | 300×200 | 0.82 | 65431 |
| AMDB 3.3 | ADJUSTABLE MOUNTING PLATE | 300×300 | 1.12 | 65432 |
| AMDB 3.4-5 | ADJUSTABLE MOUNTING PLATE | 300×450 | 1.68 | 65434 |
| AMDB 4.1-5 | ADJUSTABLE MOUNTING PLATE | 400×150 | 0.75 | 65400 |
| AMDB 4.2 | ADJUSTABLE MOUNTING PLATE | 400×200 | 1.09 | 65401 |
| AMDB 4.3 | ADJUSTABLE MOUNTING PLATE | 400×300 | 1.50 | 65405 |
| AMDB 4.4-5 | ADJUSTABLE MOUNTING PLATE | 400×450 | 2.25 | 65410 |
| AMDB 5.1-5 | ADJUSTABLE MOUNTING PLATE | 500×150 | 0.92 | 65436 |
| AMDB 5.2 | ADJUSTABLE MOUNTING PLATE | 500×200 | 1.36 | 65437 |
| AMDB 5.3 | ADJUSTABLE MOUNTING PLATE | 500×300 | 1.85 | 65438 |
| AMDB 5.4-5 | ADJUSTABLE MOUNTING PLATE | 500×450 | 2.78 | 65440 |
| AMDB 6.1-5 | ADJUSTABLE MOUNTING PLATE | 600×150 | 1.25 | 65415 |
| AMDB 6.2 | ADJUSTABLE MOUNTING PLATE | 600×200 | 1.63 | 65416 |
| AMDB 6.3 | ADJUSTABLE MOUNTING PLATE | 600×300 | 2.23 | 65420 |
| AMDB 6.4-5 | ADJUSTABLE MOUNTING PLATE | 600×450 | 3.21 | 65425 |

## FIXED TYPE MOUNTING PLATE

## FAST MONTAGEPLADE

| TYPE | DESCRIPTION | SIZE (W×H) | WEIGHT (kg) | ORDER No. Alu-zinc |
|---|---|---|---|---|
| FMDB 3.1-5 | FIXED TYPE MOUNTING PLATE | 300×150 | 0.40 | 65600 |
| FMDB 3.2 | FIXED TYPE MOUNTING PLATE | 300×200 | 0.53 | 65601 |
| FMDB 3.3 | FIXED TYPE MOUNTING PLATE | 300×300 | 0.81 | 65602 |
| FMDB 3.4-5 | FIXED TYPE MOUNTING PLATE | 300×450 | 1.22 | 65604 |
| FMDB 3.6 | FIXED TYPE MOUNTING PLATE | 300×600 | 1.63 | 65606 |
| FMDB 4.1-5 | FIXED TYPE MOUNTING PLATE | 400×150 | 0.62 | 65608 |
| FMDB 4.2 | FIXED TYPE MOUNTING PLATE | 400×200 | 0.82 | 65609 |
| FMDB 4.3 | FIXED TYPE MOUNTING PLATE | 400×300 | 1.25 | 65610 |
| FMDB 4.4-5 | FIXED TYPE MOUNTING PLATE | 400×450 | 1.71 | 65612 |
| FMDB 4.6 | FIXED TYPE MOUNTING PLATE | 400×600 | 2.50 | 65614 |
| FMDB 5.1-5 | FIXED TYPE MOUNTING PLATE | 500×150 | 0.78 | 65616 |
| FMDB 5.2 | FIXED TYPE MOUNTING PLATE | 500×200 | 1.04 | 65617 |
| FMDB 5.3 | FIXED TYPE MOUNTING PLATE | 500×300 | 1.56 | 65618 |
| FMDB 5.4-5 | FIXED TYPE MOUNTING PLATE | 500×450 | 2.34 | 65620 |
| FMDB 5.6 | FIXED TYPE MOUNTING PLATE | 500×600 | 3.12 | 65622 |
| FMDB 6.1-5 | FIXED TYPE MOUNTING PLATE | 600×150 | 0.98 | 65624 |
| FMDB 6.2 | FIXED TYPE MOUNTING PLATE | 600×200 | 1.30 | 65625 |
| FMDB 6.3 | FIXED TYPE MOUNTING PLATE | 600×300 | 1.96 | 65626 |
| FMDB 6.4-5 | FIXED TYPE MOUNTING PLATE | 600×450 | 2.94 | 65628 |
| FMDB 6.6 | FIXED TYPE MOUNTING PLATE | 600×600 | 3.93 | 65630 |

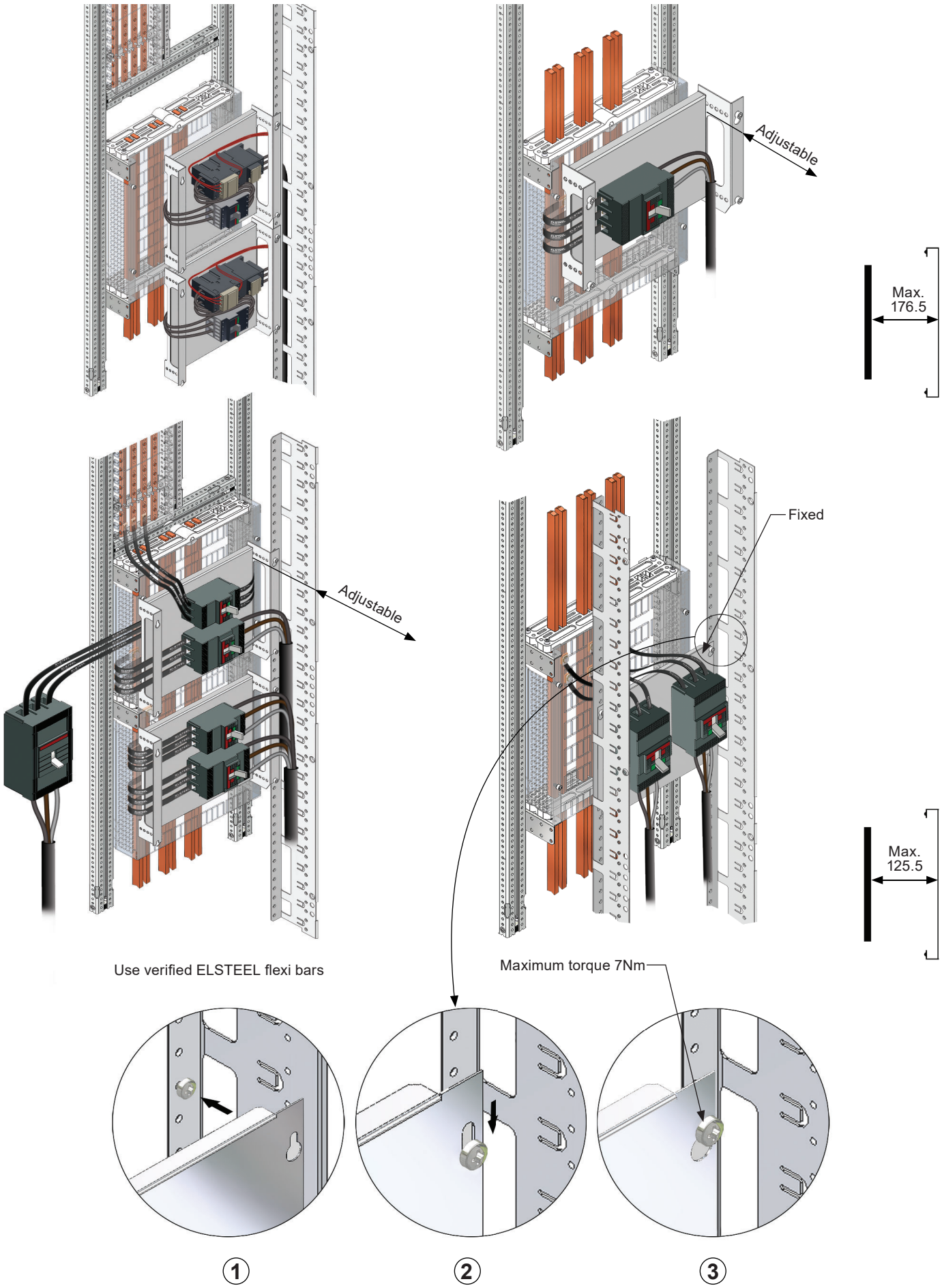
Adjustable
Max.
176.5
Adjustable
Fixed
Max.
125.5
Use verified ELSTEEL flexi bars
Maximum torque 7Nm
1
2
3

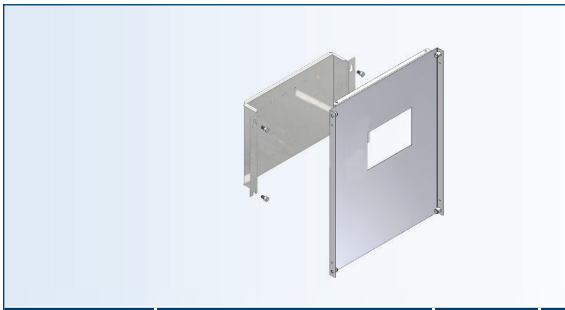

## INSERT VERTICAL (ABB)

## INDSATSE VERTIKAL (ABB)

| TYPE | DESCRIPTION | SIZE (W×H) | No. OF BREAKERS | No. OF POLES | BREAKER TYPE | WEIGHT (kg) | ORDER No. RAL 9010 SMF | ORDER No. RAL 7035 FTF |
|---|---|---|---|---|---|---|---|---|
| VIA3-20 3.3 | INSERT VERTICAL ABB | 300 × 300 | 1 | 3 | XT1 160 | 1.45 | 66025 | 64631 |
| VIA4-21 3.3 | INSERT VERTICAL ABB | 300 × 300 | 1 | 4 | XT1 160 | 1.45 | 66150 | 64828 |
| VIA3-22 4.3 | INSERT VERTICAL ABB | 400 × 300 | 2 | 3 | XT1 160 | 2.01 | 66026 | 64632 |
| VIA4-23 4.3 | INSERT VERTICAL ABB | 400 × 300 | 2 | 4 | XT1 160 | 2.01 | 66151 | 64829 |
| VIA3-24 5.3 | INSERT VERTICAL ABB | 500 × 300 | 3 | 3 | XT1 160 | 2.58 | 66027 | 64633 |
| VIA4-25 5.3 | INSERT VERTICAL ABB | 500 × 300 | 2 | 4 | XT1 160 | 2.58 | 66152 | 64830 |
| VIA3-26 6.3 | INSERT VERTICAL ABB | 600 × 300 | 4 | 3 | XT1 160 | 3.18 | 66028 | 64634 |
| VIA4-27 6.3 | INSERT VERTICAL ABB | 600 × 300 | 4 | 4 | XT1 160 | 3.14 | 66153 | 64831 |
| VIA34-36 3.3 | INSERT VERTICAL ABB | 300 × 300 | 1 | 3/4 | XT2 160 | 1.53 | 66275 | 66264 |
| VIA34-37 4.3 | INSERT VERTICAL ABB | 400 × 300 | 2 | 3/4 | XT2 160 | 2.11 | 66276 | 66265 |
| VIA34-38 5.3 | INSERT VERTICAL ABB | 500 × 300 | 3 | 3/4 | XT2 160 | 2.69 | 66277 | 66266 |
| VIA3-39 6.3 | INSERT VERTICAL ABB | 600 × 300 | 4 | 3 | XT2 160 | 3.28 | 66278 | 66267 |
| VIA4-40 6.3 | INSERT VERTICAL ABB | 600 × 300 | 3 | 4 | XT2 160 | 3.28 | 66279 | 66268 |
| VIA3-28 4.3 | INSERT VERTICAL ABB | 400 × 300 | 1 | 3 | XT3 250 | 2.01 | 66029 | 64635 |
| VIA4-29 4.3 | INSERT VERTICAL ABB | 400 × 300 | 1 | 4 | XT3 250 | 2.01 | 66154 | 64832 |
| VIA3-30 5.3 | INSERT VERTICAL ABB | 500 × 300 | 2 | 3 | XT3 250 | 2.58 | 66023 | 64629 |
| VIA4-31 5.3 | INSERT VERTICAL ABB | 500 × 300 | 2 | 4 | XT3 250 | 2.58 | 66155 | 64833 |
| VIA3-32 6.3 | INSERT VERTICAL ABB | 600 × 300 | 2 | 3 | XT3 250 | 3.14 | 65999 | 64628 |
| VIA4-33 6.3 | INSERT VERTICAL ABB | 600 × 300 | 2 | 4 | XT3 250 | 3.14 | 66157 | 64835 |
| VIA3-34 3.4-5 | INSERT VERTICAL ABB | 300 × 450 | 1 | 3 | XT3 250 | 2.25 | 66024 | 64630 |
| VIA4-35 3.4-5 | INSERT VERTICAL ABB | 300 × 450 | 1 | 4 | XT3 250 | 2.25 | 66156 | 64834 |
| VIA3-41 4.3 | INSERT VERTICAL ABB | 400 × 300 | 2 | 3 | XT4 250 | 2.11 | 66280 | 66269 |
| VIA4-42 4.3 | INSERT VERTICAL ABB | 400 × 300 | 1 | 4 | XT4 250 | 2.11 | 66281 | 66270 |
| VIA3-43 5.3 | INSERT VERTICAL ABB | 500 × 300 | 3 | 3 | XT4 250 | 2.69 | 66282 | 66271 |
| VIA4-44 5.3 | INSERT VERTICAL ABB | 500 × 300 | 2 | 4 | XT4 250 | 2.69 | 66283 | 66272 |
| VIA34-45 6.3 | INSERT VERTICAL ABB | 600 × 300 | 3 | 3/4 | XT4 250 | 3.28 | 66284 | 66273 |
| VIA34-46 3.4-5 | INSERT VERTICAL ABB | 300 × 450 | 1 | 3/4 | XT4 250 | 2.37 | 66285 | 66274 |
| VIA3-47 3.3 | INSERT VERTICAL ABB | 300 × 300 | 1 | 3 | XT5 400/630 | 1.66 | 66286 | 66296 |
| VIA34-48 4.3 | INSERT VERTICAL ABB | 400 × 300 | 1 | 3/4 | XT5 400/630 | 2.19 | 66287 | 66297 |
| VIA34-49 5.3 | INSERT VERTICAL ABB | 500 × 300 | 1 | 3/4 | XT5 400/630 | 2.72 | 66288 | 66298 |
| VIA34-50 6.3 | INSERT VERTICAL ABB | 600 × 300 | 1 | 3/4 | XT5 400/630 | 3.25 | 66289 | 66299 |
| VIA3-51 4.4 | INSERT VERTICAL ABB | 400 × 400 | 1 | 3 | XT6 1600 | 2.93 | 66290 | 66070 |
| VIA34-52 5.4 | INSERT VERTICAL ABB | 500 × 400 | 1 | 3/4 | XT6 1600 | 3.66 | 66291 | 66071 |
| VIA34-53 6.4 | INSERT VERTICAL ABB | 600 × 400 | 1 | 3/4 | XT6 1600 | 4.38 | 66292 | 66072 |
| VIA3-94 4.4 | INSERT VERTICAL ABB | 400 × 400 | 1 | 3 | XT7 1600 | 3.56 | 66720 | 66723 |
| VIA34-95 5.4 | INSERT VERTICAL ABB | 500 × 400 | 1 | 3/4 | XT7 1600 | 4.29 | 66721 | 66724 |
| VIA34-96 6.4 | INSERT VERTICAL ABB | 600 × 400 | 1 | 3/4 | XT7 1600 | 5.02 | 66722 | 66725 |

* Rear connection only

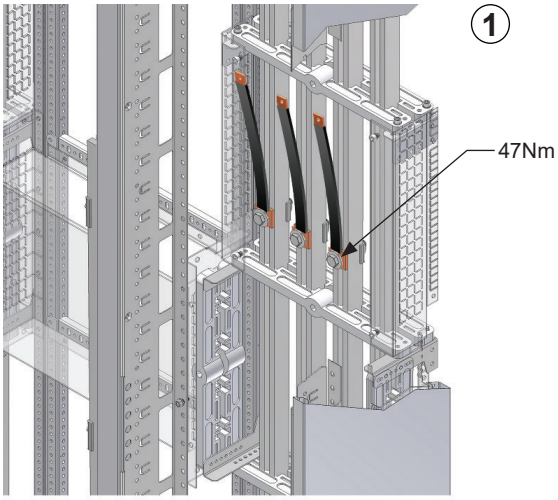
1
47Nm

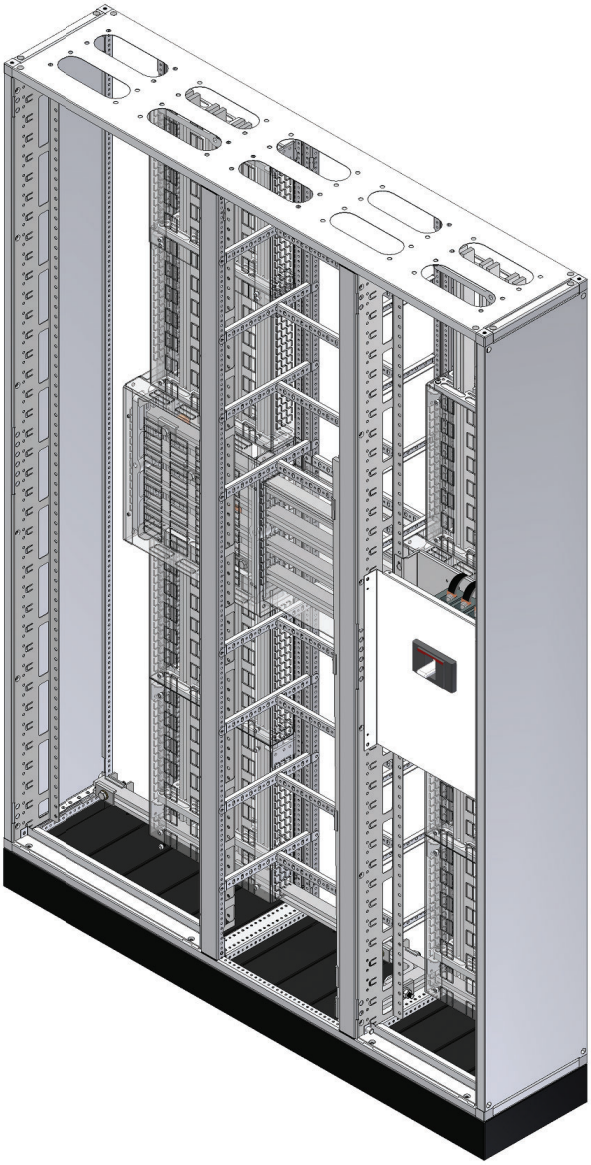

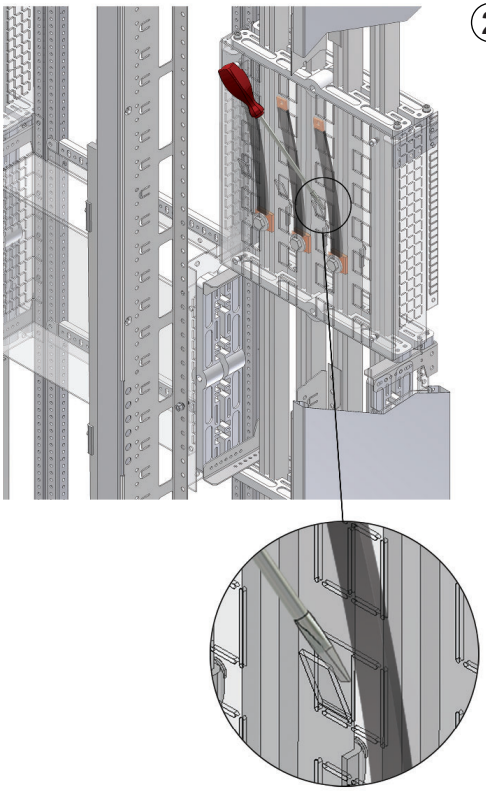
2

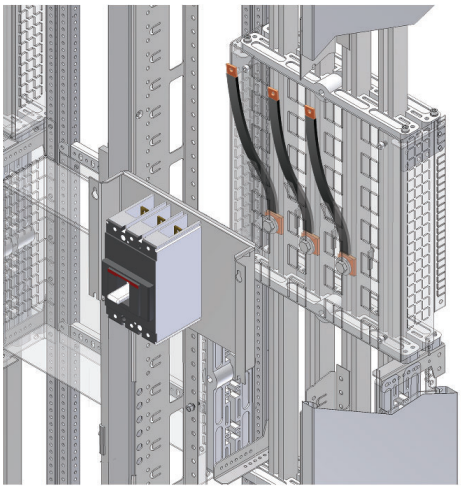
3

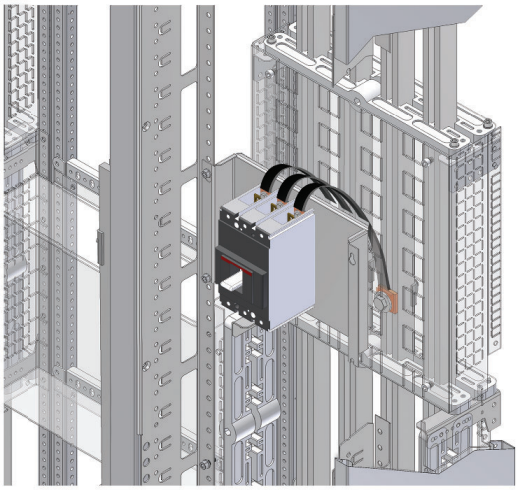
4

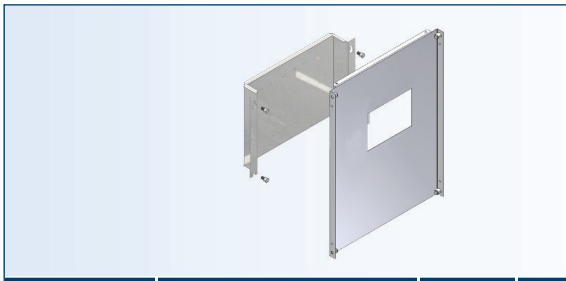

## INSERT VERTICAL (EATON)

## INDSATSE VERTIKAL (EATON)

| TYPE | DESCRIPTION | SIZE (W×H) | No. OF BREAKERS | No. OF POLES | BREAKER TYPE | WEIGHT (kg) | ORDER No. RAL 9010 SMF | ORDER No. RAL 7035 FTF |
|---|---|---|---|---|---|---|---|---|
| VIE3-1 3.3 | INSERT VERTICAL EATON | 300×300 | 1 | 3 | NZM1 160 | 1.51 | 66100 | 64713 |
| VIE4-2 3.3 | INSERT VERTICAL EATON | 300×300 | 1 | 4 | NZM1 160 | 1.52 | 66115 | 64726 |
| VIE3-3 4.3 | INSERT VERTICAL EATON | 400×300 | 2 | 3 | NZM1 160 | 2.11 | 66101 | 64714 |
| VIE4-4 4.3 | INSERT VERTICAL EATON | 400×300 | 2 | 4 | NZM1 160 | 2.11 | 66116 | 64727 |
| VIE3-5 5.3 | INSERT VERTICAL EATON | 500×300 | 3 | 3 | NZM1 160 | 2.70 | 66110 | 64723 |
| VIE4-6 5.3 | INSERT VERTICAL EATON | 500×300 | 2 | 4 | NZM1 160 | 2.70 | 66126 | 64731 |
| VIE3-7 6.3 | INSERT VERTICAL EATON | 600×300 | 4 | 3 | NZM1 160 | 3.29 | 66102 | 64715 |
| VIE4-8 6.3 | INSERT VERTICAL EATON | 600×300 | 3 | 4 | NZM1 160 | 3.29 | 66117 | 64728 |
| VIE34-9 4.3 | INSERT VERTICAL EATON | 400×300 | 1 | 3/4 | NZM2 250 | 2.37 | 66103 | 64716 |
| VIE34-10 5.3 | INSERT VERTICAL EATON | 500×300 | 2 | 3/4 | NZM2 250 | 2.98 | 66111 | 64724 |
| VIE34-11 6.3 | INSERT VERTICAL EATON | 600×300 | 2 | 3/4 | NZM2 250 | 3.59 | 66105 | 64718 |
| VIE3-12 3.4-5 | INSERT VERTICAL EATON | 300×450 | 1 | 3 | NZM2 250 | 2.74 | 66104 | 64717 |
| VIE4-13 3.4-5 | INSERT VERTICAL EATON | 300×450 | 1 | 4 | NZM2 250 | 2.74 | 66119 | 64729 |
| VIE3-14 5.4-5 | INSERT VERTICAL EATON | 500×450 | 2 | 3 | NZM3 630 | 4.81 | 66112 | 64725 |
| VIE4-15 5.4-5 | INSERT VERTICAL EATON | 500×450 | 2 | 4 | NZM3 630 | 4.81 | 66127 | 64732 |
| VIE3-16 6.4-5 | INSERT VERTICAL EATON | 600×450 | 2 | 3 | NZM3 630 | 5.76 | 66108 | 64721 |
| VIE4-17 6.4-5 | INSERT VERTICAL EATON | 600×450 | 2 | 4 | NZM3 630 | 5.76 | 66123 | 64730 |
| VIE34-18 6.4-5 | INSERT VERTICAL EATON | 600×450 | 1 | 3/4 | NZM3 630 | 5.76 | 66106 | 64719 |
| VIE3-19 3.6 | INSERT VERTICAL EATON | 300×600 | 1 | 3 | NZM3 630 | 3.82 | 66107 | 64720 |
| VIE34-20 4.6 | INSERT VERTICAL EATON | 400×600 | 1 | 3/4 | NZM3 630 | 5.23 | 66109 | 64722 |
| VIE3-21 4.6 | INSERT VERTICAL EATON | 400×600 | 1 | 3 | NZM4 1600 | 5.23 | 66097 | 64802 |
| VIE3-22 5.6 | INSERT VERTICAL EATON | 500×600 | 1 | 3 | NZM4 1600 | 6.41 | 66098 | 64803 |
| VIE4-23 5.6 | INSERT VERTICAL EATON | 500×600 | 1 | 4 | NZM4 1600 | 6.41 | 66113 | 64805 |
| VIE3-24 6.6 | INSERT VERTICAL EATON | 600×600 | 1 | 3 | NZM4 1600 | 7.59 | 66099 | 64804 |

* Rear connection only

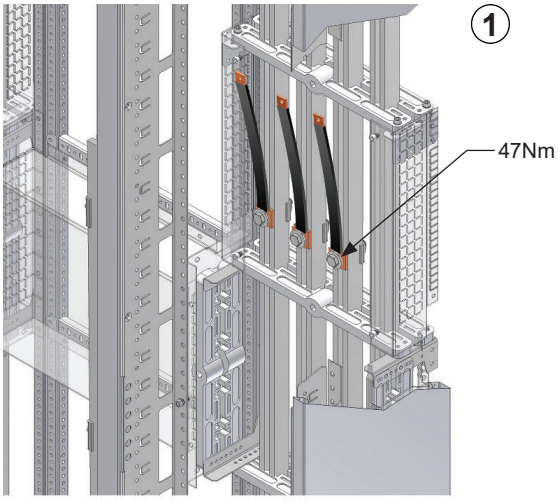
1
47Nm

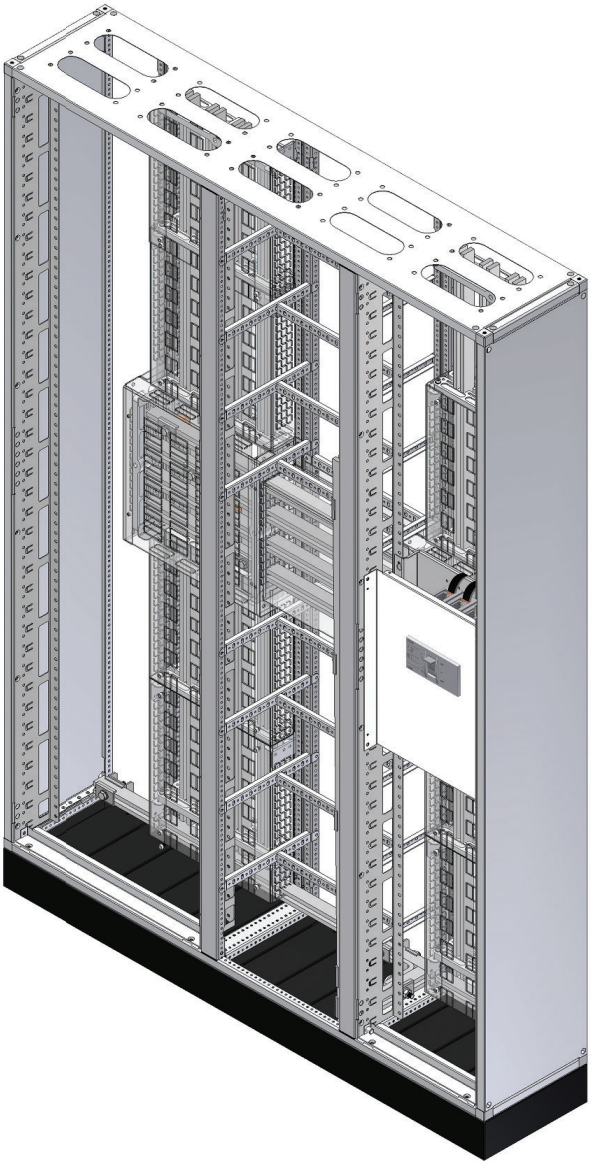

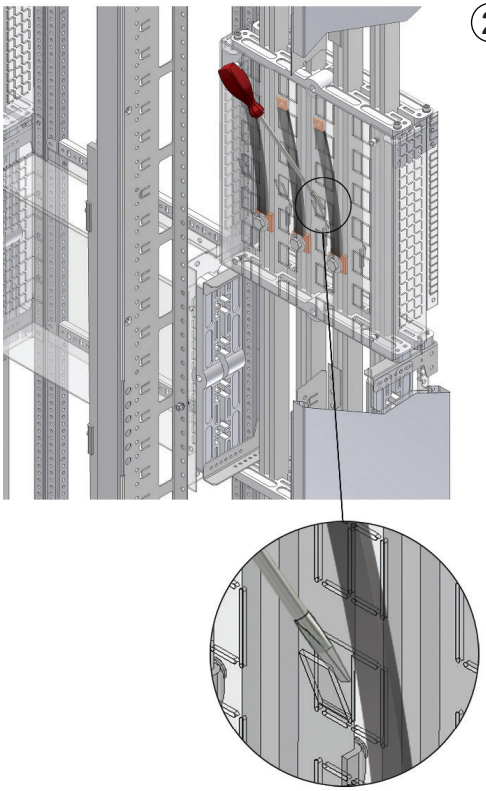
2

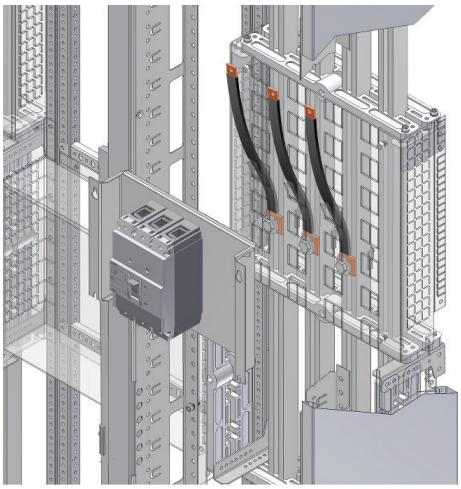
3

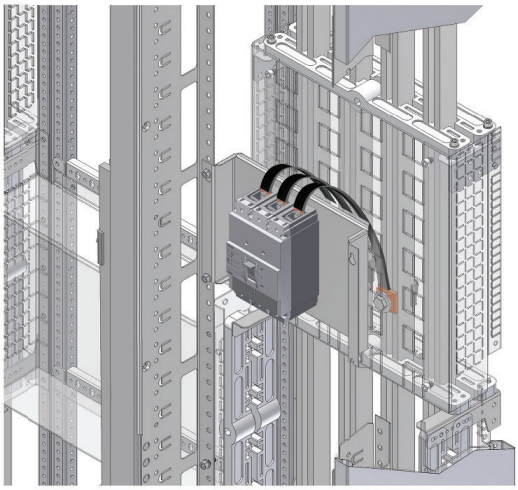
4

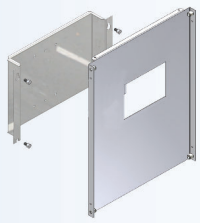

## INSERT VERTICAL (SCHNEIDER ELECTRIC)

## INDSATSE VERTIKAL (SCHNEIDER ELECTRIC)

| TYPE | DESCRIPTION | SIZE (W×H) | No. OF BREAKERS | No. OF POLES | BREAKER TYPE | WEIGHT (kg) | ORDER No. RAL 9010 SMF | ORDER No. RAL 7035 FTF |
|---|---|---|---|---|---|---|---|---|
| VIS3-1 3.2 | INSERT VERTICAL SE | 300×200 | 1 | 3 | NSX* 100/160/250 | 1.16 | 65928 | 64636 |
| VIS4-2 3.2 | INSERT VERTICAL SE | 300×200 | 1 | 4 | NSX* 100/160/250 | 1.16 | 65991 | 64620 |
| VIS3-3 4.2 | INSERT VERTICAL SE | 400×200 | 2 | 3 | NSX* 100/160/250 | 1.59 | 65929 | 64637 |
| VIS4-4 4.2 | INSERT VERTICAL SE | 400×200 | 1 | 4 | NSX* 100/160/250 | 1.59 | 65992 | 64621 |
| VIS3-5 5.2 | INSERT VERTICAL SE | 500×200 | 3 | 3 | NSX* 100/160/250 | 2.20 | 65943 | 64638 |
| VIS4-6 5.2 | INSERT VERTICAL SE | 500×200 | 2 | 4 | NSX* 100/160/250 | 2.20 | 65993 | 64622 |
| VIS3-7 6.2 | INSERT VERTICAL SE | 600×200 | 4 | 3 | NSX* 100/160/250 | 2.45 | 65944 | 64639 |
| VIS4-8 6.2 | INSERT VERTICAL SE | 600×200 | 3 | 4 | NSX* 100/160/250 | 2.45 | 65994 | 64623 |
| VIS3-9 3.3 | INSERT VERTICAL SE | 300×300 | 1 | 3 | NSX 100/160/250 | 1.59 | 65931 | 64677 |
| VIS4-10 3.3 | INSERT VERTICAL SE | 300×300 | 1 | 4 | NSX 100/160/250 | 1.58 | 65976 | 64708 |
| VIS3-11 4.3 | INSERT VERTICAL SE | 400×300 | 2 | 3 | NSX 100/160/250 | 2.16 | 65930 | 64676 |
| VIS4-12 4.3 | INSERT VERTICAL SE | 400×300 | 1 | 4 | NSX 100/160/250 | 2.16 | 65975 | 64707 |
| VIS34-13 4.3 | INSERT VERTICAL SE | 400×300 | 1 | 3 | NSX 100/160/250 | 2.16 | 65933 | 64679 |
| VIS3-14 5.3 | INSERT VERTICAL SE | 500×300 | 3 | 3 | NSX 100/160/250 | 2.74 | 65940 | 64686 |
| VIS34-15 5.3 | INSERT VERTICAL SE | 500×300 | 2 | 3/4 | NSX 100/160/250 | 2.74 | 65941 | 64687 |
| VIS3-16 6.3 | INSERT VERTICAL SE | 600×300 | 4 | 3 | NSX 100/160/250 | 3.33 | 65932 | 64678 |
| VIS4-17 6.3 | INSERT VERTICAL SE | 600×300 | 3 | 4 | NSX 100/160/250 | 3.34 | 65977 | 64709 |
| VIS34-18 6.3 | INSERT VERTICAL SE | 600×300 | 2 | 3/4 | NSX 100/160/250 | 3.33 | 65935 | 64681 |
| VIS3-19 3.4-5 | INSERT VERTICAL SE | 300×450 | 1 | 3 | NSX 100/160/250 | 2.45 | 65934 | 64680 |
| VIS4-20 3.4-5 | INSERT VERTICAL SE | 300×450 | 1 | 4 | NSX 100/160/250 | 5.09 | 65979 | 64710 |
| VIS3-21 3.4 | INSERT VERTICAL SE | 300×400 | 1 | 3 | NSX 400/630 | 2.53 | 65995 | 64797 |
| VIS3-22 4.4 | INSERT VERTICAL SE | 400×400 | 1 | 3 | NSX 400/630 | 3.39 | 65996 | 64798 |
| VIS4-23 4.4 | INSERT VERTICAL SE | 400×400 | 1 | 4 | NSX 400/630 | 2.74 | 65972 | 64642 |
| VIS3-24 5.4 | INSERT VERTICAL SE | 500×400 | 2 | 3 | NSX 400/630 | 4.24 | 65997 | 64799 |
| VIS4-25 5.4 | INSERT VERTICAL SE | 500×400 | 2 | 4 | NSX 400/630 | 3.39 | 65973 | 64643 |
| VIS3-26 6.4 | INSERT VERTICAL SE | 600×400 | 3 | 3 | NSX 400/630 | 5.09 | 65998 | 64800 |
| VIS4-27 6.4 | INSERT VERTICAL SE | 600×400 | 2 | 4 | NSX 400/630 | 4.24 | 65974 | 64644 |
| VIS3-28 5.4-5 | INSERT VERTICAL SE | 500×450 | 2 | 3 | NSX 400/630 | 4.46 | 65942 | 64688 |
| VIS4-29 5.4-5 | INSERT VERTICAL SE | 500×450 | 2 | 4 | NSX 400/630 | 3.33 | 65986 | 64712 |
| VIS3-30 6.4-5 | INSERT VERTICAL SE | 600×450 | 2 | 3 | NSX 400/630 | 5.36 | 65938 | 64684 |
| VIS4-31 6.4-5 | INSERT VERTICAL SE | 600×450 | 2 | 4 | NSX 400/630 | 5.36 | 65983 | 64711 |
| VIS34-32 6.4-5 | INSERT VERTICAL SE | 600×450 | 1 | 3/4 | NSX 400/630 | 5.36 | 65936 | 64682 |
| VIS3-33 3.6 | INSERT VERTICAL SE | 300×600 | 1 | 3 | NSX 400/630 | 3.61 | 65937 | 64683 |
| VIS34-34 4.6 | INSERT VERTICAL SE | 400×600 | 1 | 3/4 | NSX 400/630 | 4.83 | 65939 | 64685 |
| VIS3-35 4.4 | INSERT VERTICAL SE | 400×400 | 1 | 3 | NS 630b 1600 | 3.73 | 65987 | 64616 |
| VIS3-36 5.4 | INSERT VERTICAL SE | 500×400 | 1 | 3 | NS 630b 1600 | 4.58 | 65988 | 64617 |
| VIS4-37 5.4 | INSERT VERTICAL SE | 500×400 | 1 | 4 | NS 630b 1600 | 4.83 | 65958 | 64640 |
| VIS3-38 6.4 | INSERT VERTICAL SE | 600×400 | 2 | 3 | NS 630b 1600 | 5.44 | 65989 | 64618 |
| VIS4-39 6.4 | INSERT VERTICAL SE | 600×400 | 1 | 4 | NS 630b 1600 | 4.58 | 65959 | 64641 |

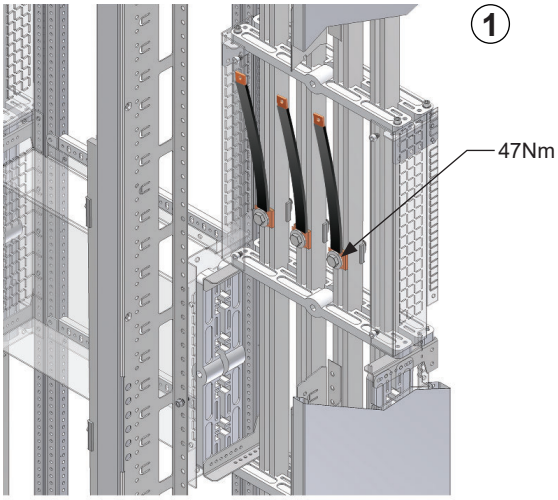
1
47Nm

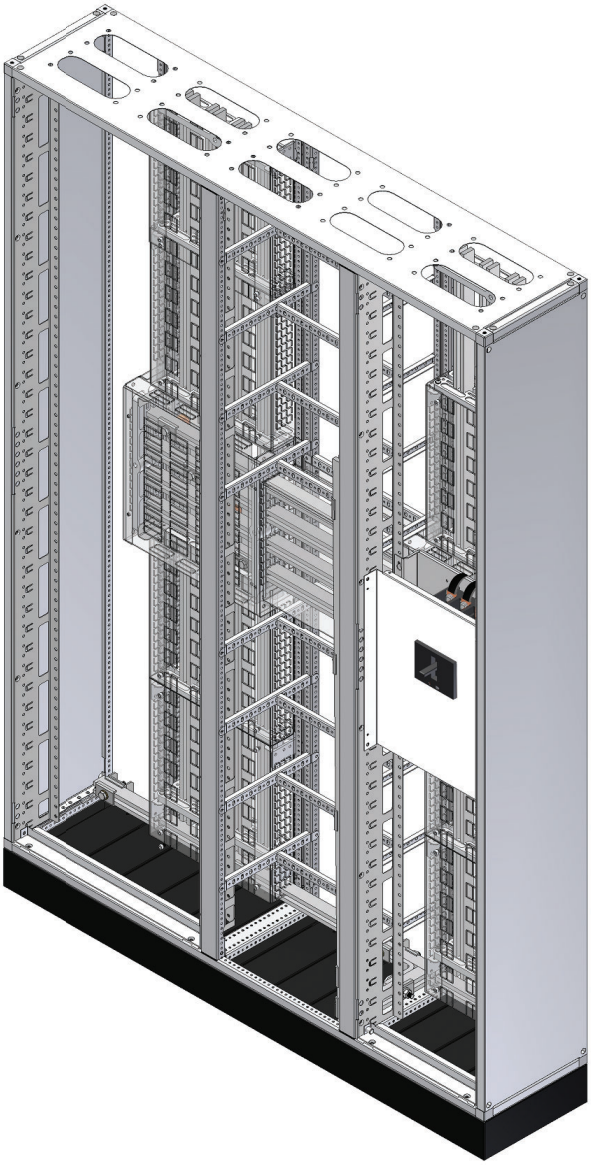

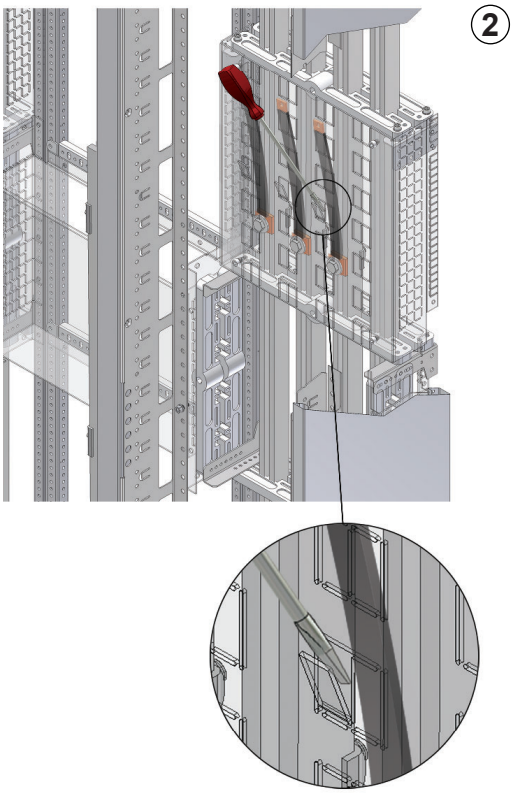
2

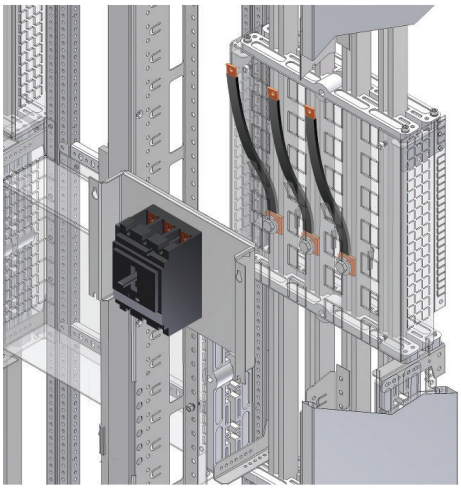
3

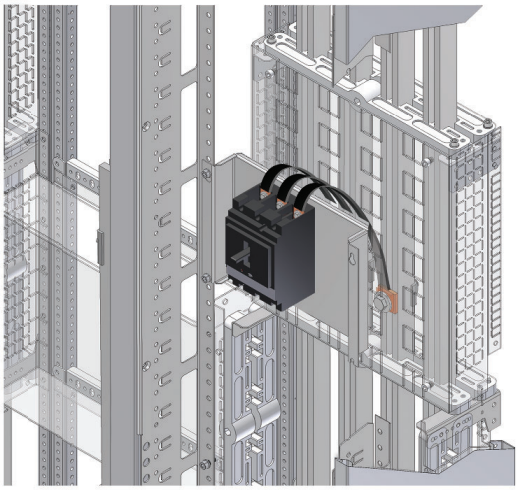
4

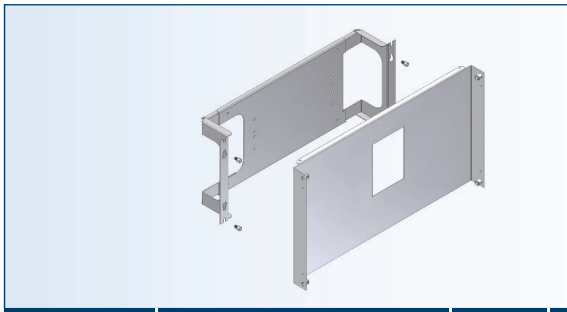

## INSERT HORIZONTAL (ABB)

## INDSATSE HORISONTAL (ABB)

| TYPE | DESCRIPTION | SIZE (W×H) | No. OF BREAKERS | No. OF POLES | BREAKER TYPE | WEIGHT (kg) | ORDER No. RAL 9010 SMF | ORDER No. RAL 7035 FTF |
|---|---|---|---|---|---|---|---|---|
| HIA3-19 4.3 | INSERT HORIZONTAL ABB | 400 × 300 | 1 | 3 | XT1 160 | 2.82 | 66240 | 64836 |
| HIA4-20 4.3 | INSERT HORIZONTAL ABB | 400 × 300 | 1 | 4 | XT1 160 | 2.82 | 66246 | 64842 |
| HIA3-21 5.3 | INSERT HORIZONTAL ABB | 500 × 300 | 1 | 3 | XT1 160 | 3.43 | 66242 | 64838 |
| HIA4-22 5.3 | INSERT HORIZONTAL ABB | 500 × 300 | 1 | 4 | XT1 160 | 3.43 | 66248 | 64844 |
| HIA3-23 6.3 | INSERT HORIZONTAL ABB | 600 × 300 | 1 | 3 | XT1 160 | 4.04 | 66244 | 64840 |
| HIA4-24 6.3 | INSERT HORIZONTAL ABB | 600 × 300 | 1 | 4 | XT1 160 | 4.04 | 66250 | 64846 |
| HIA34-31 4.3 | INSERT HORIZONTAL ABB | 400 × 300 | 1 | 3/4 | XT2 160 | 2.82 | 66258 | 66252 |
| HIA34-32 5.3 | INSERT HORIZONTAL ABB | 500 × 300 | 1 | 3/4 | XT2 160 | 3.43 | 66259 | 66253 |
| HIA34-33 6.3 | INSERT HORIZONTAL ABB | 600 × 300 | 1 | 3/4 | XT2 160 | 4.04 | 66260 | 66254 |
| HIA3-25 4.3 | INSERT HORIZONTAL ABB | 400 × 300 | 1 | 3 | XT3 250 | 2.82 | 66241 | 64837 |
| HIA4-26 4.3 | INSERT HORIZONTAL ABB | 400 × 300 | 1 | 4 | XT3 250 | 2.82 | 66247 | 64843 |
| HIA3-27 5.3 | INSERT HORIZONTAL ABB | 500 × 300 | 1 | 3 | XT3 250 | 3.43 | 66243 | 64839 |
| HIA4-28 5.3 | INSERT HORIZONTAL ABB | 500 × 300 | 1 | 4 | XT3 250 | 3.43 | 66249 | 64845 |
| HIA3-29 6.3 | INSERT HORIZONTAL ABB | 600 × 300 | 1 | 3 | XT3 250 | 4.04 | 66245 | 64841 |
| HIA4-30 6.3 | INSERT HORIZONTAL ABB | 600 × 300 | 1 | 4 | XT3 250 | 4.04 | 66251 | 64847 |
| HIA34-34 4.3 | INSERT HORIZONTAL ABB | 400 × 300 | 1 | 3/4 | XT4 250 | 2.82 | 66261 | 66255 |
| HIA34-35 5.3 | INSERT HORIZONTAL ABB | 500 × 300 | 1 | 3/4 | XT4 250 | 3.43 | 66262 | 66256 |
| HIA34-36 6.3 | INSERT HORIZONTAL ABB | 600 × 300 | 1 | 3/4 | XT4 250 | 4.04 | 66263 | 66257 |
| HIA34-37 5.3 | INSERT HORIZONTAL ABB | 500 × 300 | 1 | 3/4 | XT5 400/630 | 3.76 | 66050 | 66060 |
| HIA34-38 6.3 | INSERT HORIZONTAL ABB | 600 × 300 | 1 | 3/4 | XT5 400/630 | 4.35 | 66051 | 66061 |
| HIA3-39 5.3 | INSERT HORIZONTAL ABB | 500 × 300 | 1 | 3 | XT6 1600 | 3.73 | 66052 | 66062 |
| HIA34-40 5.4 | INSERT HORIZONTAL ABB | 500 × 400 | 1 | 3/4 | XT6 1600 | 4.90 | 66053 | 66063 |
| HIA3-41 6.3 | INSERT HORIZONTAL ABB | 600 × 300 | 1 | 3 | XT6 1600 | 4.32 | 66054 | 66064 |
| HIA34-42 6.4 | INSERT HORIZONTAL ABB | 600 × 400 | 1 | 3/4 | XT6 1600 | 5.68 | 66055 | 66065 |
| HIA3-75 5.3 | INSERT HORIZONTAL ABB | 500 × 300 | 1 | 3 | XT7 1600 | 4.06 | 66726 | 66730 |
| HIA34-76 5.4 | INSERT HORIZONTAL ABB | 500 × 400 | 1 | 3/4 | XT7 1600 | 5.32 | 66727 | 66731 |
| HIA3-77 6.3 | INSERT HORIZONTAL ABB | 600 × 300 | 1 | 3 | XT7 1600 | 4.65 | 66728 | 66732 |
| HIA34-78 6.4 | INSERT HORIZONTAL ABB | 600 × 400 | 1 | 3/4 | XT7 1600 | 6.11 | 66729 | 66733 |

* Rear connection only

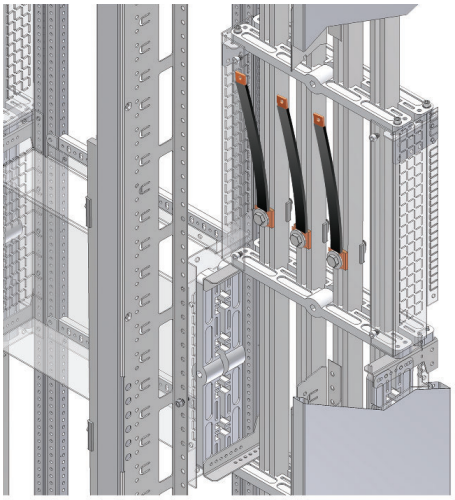

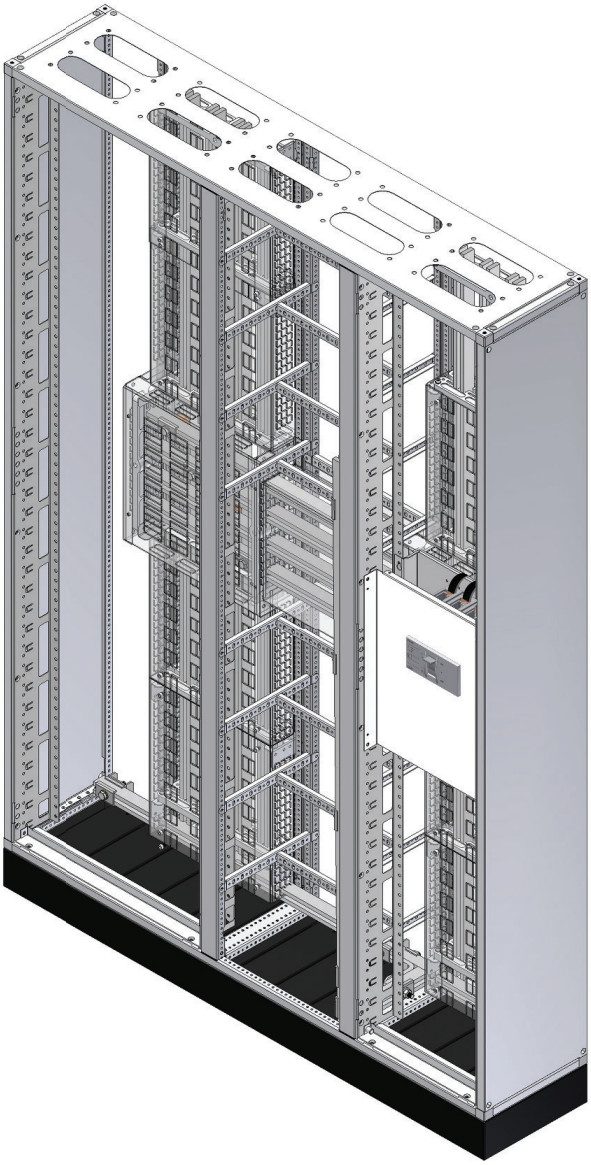

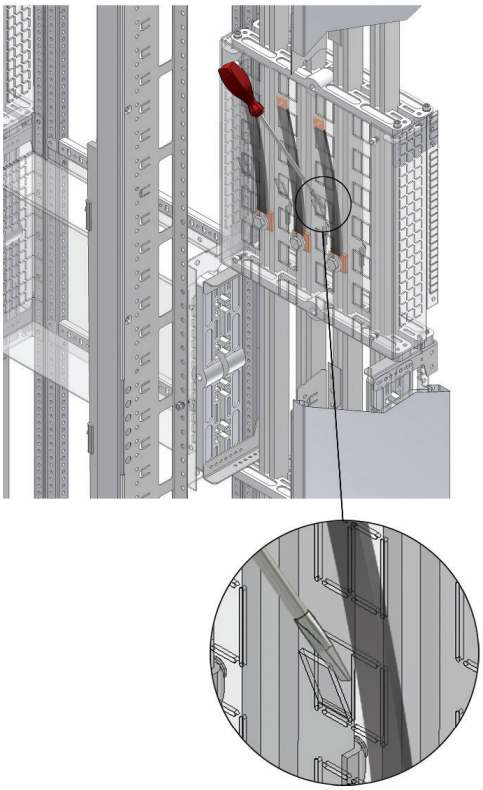

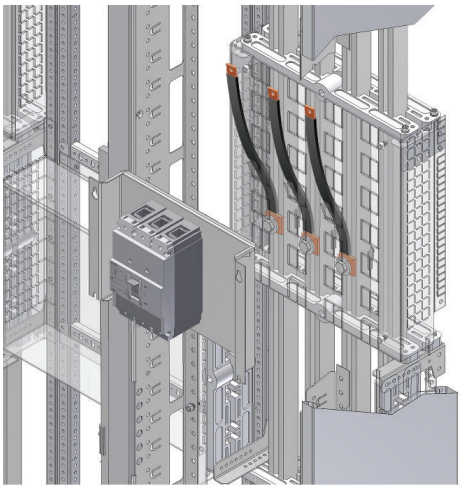

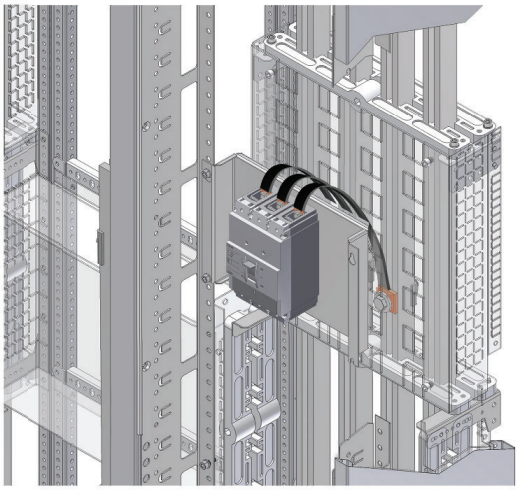

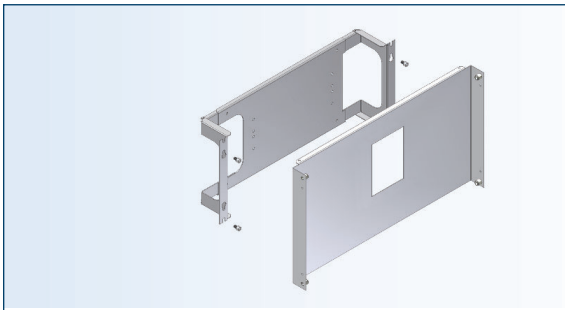

## INSERT HORIZONTAL (EATON)

## INDSATSE HORISONTAL (EATON)

| TYPE | DESCRIPTION | SIZE (W×H) | No. OF BREAKERS | No. OF POLES | BREAKER TYPE | WEIGHT (kg) | ORDER No. RAL 9010 SMF | ORDER No. RAL 7035 FTF |
|---|---|---|---|---|---|---|---|---|
| HIE3-1 4.3 | INSERT HORIZONTAL EATON | 400×300 | 1 | 3 | NZM1 160 | 2.78 | 66190 | 64755 |
| HIE4-2 4.3 | INSERT HORIZONTAL EATON | 400×300 | 1 | 4 | NZM1 160 | 2.78 | 66230 | 64785 |
| HIE3-3 5.3 | INSERT HORIZONTAL EATON | 500×300 | 1 | 3 | NZM1 160 | 3.39 | 66192 | 64757 |
| HIE4-4 5.3 | INSERT HORIZONTAL EATON | 500×300 | 1 | 4 | NZM1 160 | 3.39 | 66232 | 64787 |
| HIE3-5 6.3 | INSERT HORIZONTAL EATON | 600×300 | 1 | 3 | NZM1 160 | 4.00 | 66195 | 64760 |
| HIE4-6 6.3 | INSERT HORIZONTAL EATON | 600×300 | 1 | 4 | NZM1 160 | 4.00 | 66235 | 64790 |
| HIE3-7 4.3 | INSERT HORIZONTAL EATON | 400×300 | 1 | 3 | NZM2 250 | 3.05 | 66191 | 64756 |
| HIE4-8 4.3 | INSERT HORIZONTAL EATON | 400×300 | 1 | 4 | NZM2 250 | 3.05 | 66231 | 64786 |
| HIE3-9 5.3 | INSERT HORIZONTAL EATON | 500×300 | 1 | 3 | NZM2 250 | 3.61 | 66193 | 64758 |
| HIE4-10 5.3 | INSERT HORIZONTAL EATON | 500×300 | 1 | 4 | NZM2 250 | 3.61 | 66233 | 64788 |
| HIE3-11 6.3 | INSERT HORIZONTAL EATON | 600×300 | 1 | 3 | NZM2 250 | 4.22 | 66196 | 64761 |
| HIE4-12 6.3 | INSERT HORIZONTAL EATON | 600×300 | 1 | 4 | NZM2 250 | 4.22 | 66236 | 64791 |
| HIE3-13 5.3 | INSERT HORIZONTAL EATON | 500×300 | 1 | 3 | NZM3 630 | 3.84 | 66194 | 64759 |
| HIE3-14 6.3 | INSERT HORIZONTAL EATON | 600×300 | 1 | 3 | NZM3 630 | 4.43 | 66197 | 64762 |
| HIE4-15 5.4-5 | INSERT HORIZONTAL EATON | 500×450 | 1 | 4 | NZM3 630 | 5.9 | 66234 | 64789 |
| HIE4-16 6.4-5 | INSERT HORIZONTAL EATON | 600×450 | 1 | 4 | NZM3 630 | 6.82 | 66237 | 64792 |

* Rear connection only

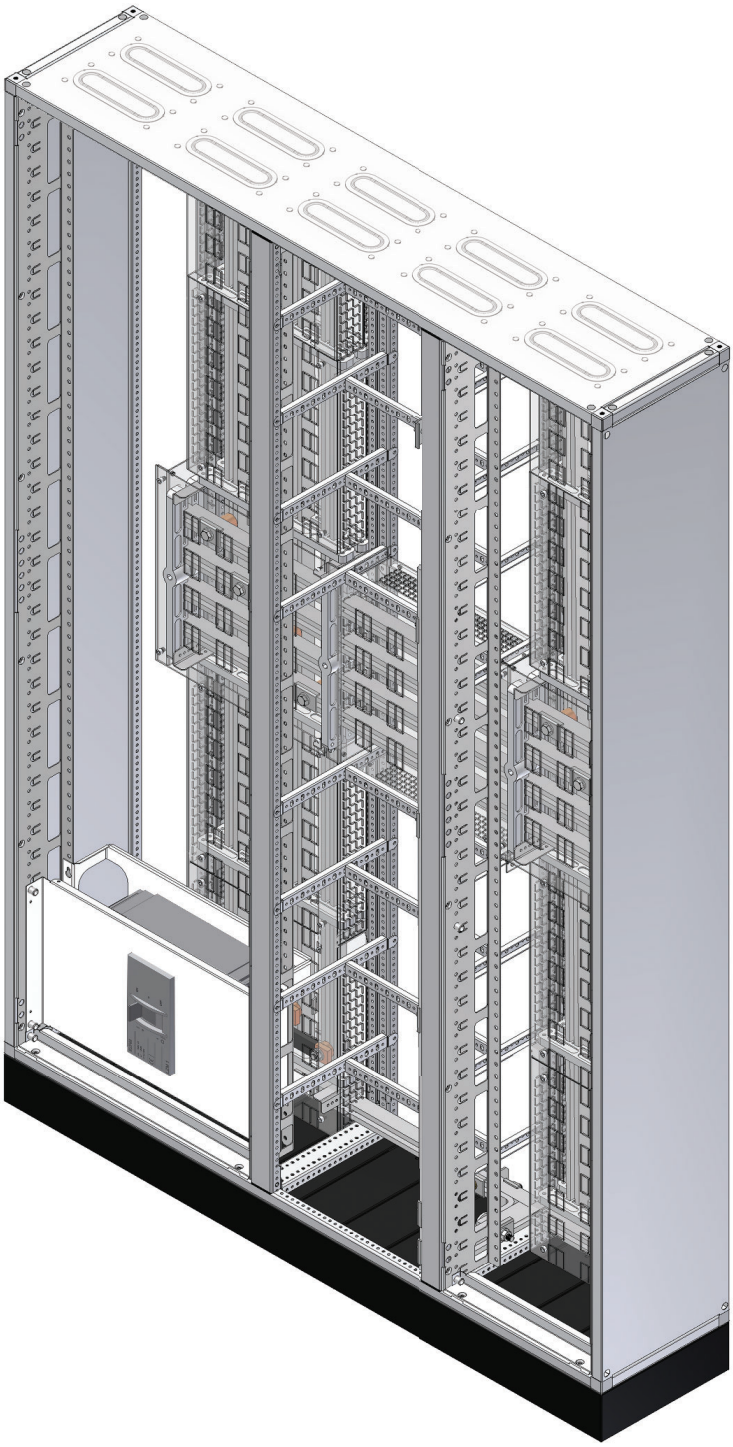

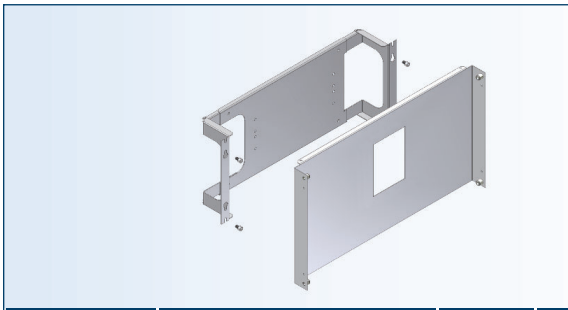

## INSERT HORIZONTAL (SCHNEIDER ELECTRIC)

## INDSATSE HORISONTAL (SCHNEIDER ELECTRIC)

| TYPE | DESCRIPTION | SIZE (W×H) | No. OF BREAKERS | No. OF POLES | BREAKER TYPE | WEIGHT (kg) | ORDER No. RAL 9010 SMF | ORDER No. RAL 7035 FTF |
|---|---|---|---|---|---|---|---|---|
| HIS3-1 4.3 | INSERT HORIZONTAL SE | 400×300 | 1 | 3 | NSX 100/160/250 | 2.98 | 66180 | 64750 |
| HIS4-1 4.3 | INSERT HORIZONTAL SE | 400×300 | 1 | 4 | NSX 100/160/250 | 2.98 | 66220 | 64780 |
| HIS3-2 5.3 | INSERT HORIZONTAL SE | 500×300 | 1 | 3 | NSX 100/160/250 | 3.6 | 66181 | 64751 |
| HIS4-2 5.3 | INSERT HORIZONTAL SE | 500×300 | 1 | 4 | NSX 100/160/250 | 3.6 | 66221 | 64781 |
| HIS3-4 6.3 | INSERT HORIZONTAL SE | 600×300 | 1 | 3 | NSX 100/160/250 | 4.21 | 66183 | 64753 |
| HIS4-4 6.3 | INSERT HORIZONTAL SE | 600×300 | 1 | 4 | NSX 100/160/250 | 4.21 | 66223 | 64783 |
| HIS3-3 5.3 | INSERT HORIZONTAL SE | 500×300 | 1 | 3 | NSX 400/630 | 3.64 | 66182 | 64752 |
| HIS3-5 6.3 | INSERT HORIZONTAL SE | 600×300 | 1 | 3 | NSX 400/630 | 4.25 | 66184 | 64754 |
| HIS4-3 5.4-5 | INSERT HORIZONTAL SE | 500×450 | 1 | 4 | NSX 400/630 | 5.58 | 66222 | 64782 |
| HIS4-5 6.4-5 | INSERT HORIZONTAL SE | 600×450 | 1 | 4 | NSX 400/630 | 6.53 | 66224 | 64784 |

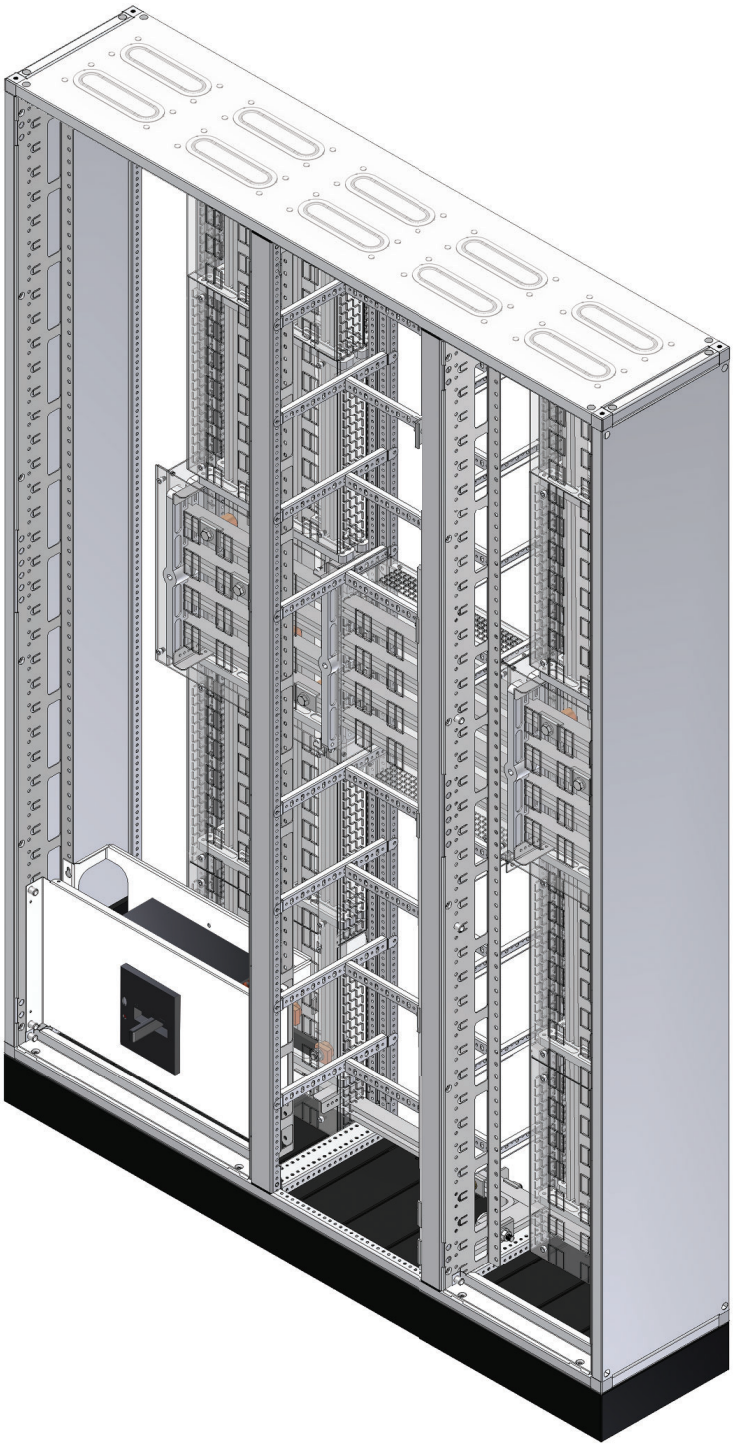

## GENERAL DATA

| | | |
|---|---|---|
| **Installation** | | Indoor |
| **Mounting possibilities** | | Floor standing |
| **Colour** | | RAL 7035 Fine Textured (Standard)<br>Other colours by request |
| **Coating** | Type | Epoxy Polyester Powder |
| | Thickness | ≥ 60µm |

## MECHANICAL DATA

| | | |
|---|---|---|
| **Service access** | | Front only |
| | | Front & Rear |
| **Cable entry** | | Top |
| | | Bottom |
| **Compartments** | | Fixed |
| **Degree of protection (IP code)** | | Up to IP43<br>Up to IP33 (in combination with IK08) |
| **Mechanical impact (IK code)** | | IK08 |
| **Form of internal separation** | as per IEC61439-2 | Up to 4b |
| | as per BS EN 61439-2 | Up to 4 Type 1-7 |
| **Mechanical operation** | Techno Module Light | 200 cycles |
| **Recommended dimensions of transport section** | Length | Up to 2400 mm (can be extended) |
| | Height | Up to 2400 mm (can be extended) |
| | Depth | Up to 2400 mm (can be extended) |

## ELECTRICAL DATA

| | | |
|---|---|---|
| **Rated operational voltage ($U_e$)** | | Up to 1000 V |
| **Rated insulation voltage ($U_i$)** | | Up to 1000 V |
| **Rated impulse withstand voltage ($U_{imp}$)** | | Up to 12 kV |
| **Rated frequency (f)** | | Up to 60 Hz |
| **Rated current ($I_n$)** | Main busbar | Up to 1600 A @ 35$^0$C |
| | | Up to 1600 A @ 50$^0$C |
| | Functional unit[1] | Up to 1450 A @ 35$^0$C |
| | | Up to 1170 A @ 50$^0$C |
| **Rated short-time withstand current ($I_{cw}$)** | | Up to 50 kA - 1s |
| **Rated conditional short circuit current ($I_{cc}$)[2]** | | Up to 70 kA @ 415 V |
| | | Up to 25 kA @ 690 V |
| | | Up to 32 kA @ 800 V |
| **Pollution degree** | | 3 |
| **Earthing system** | | TN-S, TN-C, TN-C-S, TT, IT |

[1] Ratings depend on circuit breaker model and manufacturer. Refer test certificates on www.elsteel.com
[2] Ratings @690V and @800V are applicable for functional unit compartments with Techno Module doors. Refer test certificates on www.elsteel.com

| TYPE | DESCRIPTION | IK RATING | REMARKS |
|---|---|---|---|
| **Enclosure IP43/IP33 (in combination with IK08)** | | | |
| PFL | Plinth Frame Light | IK08 | |
| PFLC | Plinth Frame Light with Corner Assembly | | |
| SGPFL | Steel Gland Plate | | |
| PGPFL | PC Gland Plate | | |
| CRS | Corners | | Version 2 |
| CB | Corner Bar | | Version 2 |
| CBSL | Cross Bar Light | | |
| DOL | Door Light | | Version 3 |
| DLSH | Door Light with Swing Handle | | Version 3 |
| DOB 3 | Double Bit 3 Lock Insert | | |
| SQ8 | Square Lock Insert 8 mm | | |
| KLSH | Key Lock Insert | | |
| KLSHC | Key Lock Insert CL-001 | | |
| PLSH | Push Lock Insert | | |
| DWNL | Door Light with Norwegian Lock | | Version 3 |
| KL | Knob Lock - Plastic | | Version 3 |
| COVL | Cover Light | | Version 3 |
| DSES | Door Seal System | | Version 3 |
| **Enclosure IP3X** | | | |
| CRL | Corners Light | IK08 | |
| CBL | Corner Bar Light | | |

| | |
|---|---|
| Plinth Frame Light | Mild steel 1.5 mm |
| Corners Light | Aluminium die casted |
| Corners Version 2 | Aluminium die casted |
| Corner Bar / Cross Bar Light | Electro Galvanized steel 1 mm |
| Corner Bar Version 2 | Electro Galvanized steel 2 mm |
| Door / Cover Light | Mild steel 1 mm |
| Mounting Plate | Mild steel 2 mm<br>Alu-zinc 2 mm<br>Hot dip Galvanized steel 3 mm |
| Fixed Type Mounting Plate | Alu-zinc 2 mm |
| Instant Plate Light | Mild steel 1 mm |
| Steel Blank Front Plate | Mild steel 1 mm |
| Danish Standard Meter Compartment | Mild steel 1 mm |
| Norwegian Standard Meter Compartment | Mild steel 1 mm |
| Adjustable Mounting Plate | Alu-zinc 1.5 mm |
| Chassis Profile | Alu-zinc 1.5 mm |
| Steel Din Rail Insert | Mild steel 1 mm |
| Escutcheon Door | Mild steel 1.5 mm |
| Busbar Holder | Self extinguishing fibre material / reinforced PC |

| COPPER SPECIFICATIONS |
|---|
| Electrolytic Copper high conductivity OC-ETP 99.98 % JIS H3140 C 1100 Tempered upto half hard. |

## 1. Standard Paint

**Degreasing and Phosphating**

- By the spray method at approx. 47°C
- Cleaning and passivating of the surface
- Coating with phosphate (coat thickness approx. 1 µm)

**Textured Powder Coating**

- Electrostatic coating
- Raw material: Epoxy Polyester
- Can be readily overpainted
- Can be decontaminated
- High mechanical strength
- Good resistance to chemicals and UV rays coat thickness ≥70 µm

**Smooth Powder Coating**

- Electrostatic coating
- Raw material: Epoxy Polyester
- Can be readily overpainted
- Can be decontaminated
- High mechanical strength
- Good resistance to chemicals and UV rays coat thickness ≥60 µm

**Corrosion resistance in accordance with IEC 62208 clause 9.13.1 and IEC 61439-2 clause 10.2.2.2 Severity test A**

- 6 cycles of 24h each damp heat cycling test according to IEC 60068-2-30 (Test Db) at (40±2) °C and relative humidity of 95%
- 2 cycles of 24h each to salt mist test according to IEC 60068-2-11 (Test Ka: salt mist) at a temperature of (35±2) °C

Summary: No signs of rust, suitable for harsh industrial surrounding (Indoor installation)

## 2. Resistance

The standard coating is resistant to:

- Mineral oils
- Lubricants
- Machining emulsions
- Solvents (briefly, such as during cleaning processes)

The standard coating is suitable for a continuous temperature of -40°C to +90°C.
The standard coating can withstand a continuous temperature of 45°C to 85% RH.

**Please Note**
If UV resistant powder coating is required it has to be mentioned as a special requirement. The standard coating is not UV Resistant. IP protection categories do not imply that enclosures are suitable for outdoor applications.

## 3. Overpainting

After careful cleaning and perhaps slight roughening of the surface, the standard coating can be overpainted with Powder coating.

*Powder Coating System : Electrostatic Powder Coating System (ITW Gema – Switzerland)
*Pretreatment System : Five stage, Phosphate free Conversion Coating system (Henkel Germany)

**Elsteel Techno Module Light System** is cerified as per IEC by independent certification authorities.

**Elsteel Techno Module Light System** is fully type tested as per IEC 61439-1, IEC 61439-2 with the following brands.

| Enclosure type | Breaker brand | Standard | Rated current of the assembly, $I_{nA}$ | Date of issue | Certificate No. |
|---|---|---|---|---|---|
| Techno Module Light | ABB | IEC 61439-2 ed 3.0 2020-07 | 1600A | May 2022 | DEKRA-2254507.100 |
| Techno Module Light | General Electric | IEC 61439-1 ed 2.0 2011-08<br>IEC 61439-2 ed 2.0 2011-08 | 1000 A | December 2012 | IPH-1819.2130777.0451 |

For more certifications and latest updates please see www.elsteel.com

MODULAR
ELSTEEL
ENCLOSURES

**100% Danish**
Technology

Møllevej 9 C · 2990 Nivå
Denmark
Tel +45 49 22 33 44
elsteel@elsteel.dk
**www.elsteel.com**

© 2004-2024 ELSTEEL. All Rights Reserved - VERSION 5